ATE New Parts
ATE Neuteile

12/2022

Brakethrough Technology

Erstklassig
First-class

Besser ist besser

Wenn es um Qualität geht, genügt uns ein „sehr gut“ noch lange nicht. Wir erfüllen hohe Ansprüche an das Qualitätsmanagement und die europäische Sicherheitsnorm ECE-R90 wird von ATE sogar übertroffen. Zudem führen wir zahlreiche zusätzliche Tests durch, unter anderem zu Verschleiß und Wärmeleistung.

Auch Nachhaltigkeit ist uns wichtig: Wir stellen die Mischungen für ATE Bremsbeläge auf kupferfreie Materialien um und setzen bei ATE Ceramic auf geringen Abrieb. Nutzen ausschließlich umweltfreundliches Material für die Beschichtung von Bremsscheiben. Und bereiten Produkte wie Bremssättel wieder auf.

Better is better

When it comes to quality, “very good” is simply not good enough for us. We meet high standards of quality management – and ATE even exceeds the European safety standard ECE-R90. We also perform many additional tests, including wear and thermal performance.

Sustainability is also important to us: we convert the compounds for ATE brake pads to copperfree materials and opt for low abrasion with ATE Ceramic. We only use environmentally friendly material for the coating of brake discs – and we remanufacture products like brake callipers.

© 2023 Continental Aftermarket & Services GmbH

Höchste Qualität für optimale Leistung.

NEU: SUPER DOT 5.1

Neue Premium-Flüssigkeit ATE SUPER DOT 5.1 mit bester Funktionalität bei heißen wie kalten Einsatzbedingungen: 5 °C höherer Nasssiedepunkt und höheres Wechselintervall als ATE SL.6 bei gleich guter Viskosität, ideal für Fahrzeuge mit modernen Fahrerassistenzsystemen wie ESP®, ABS und ASR.

Große Auswahl für alle Einsatzgebiete

- ATE SL als bewährter DOT 4 Typ, ATE TYP 200 für Rennsportbegeisterte und ATE DOT 3 G für Oldtimer und Fahrzeuge, wo die Verwendung einer DOT 3-Flüssigkeit vom Fahrzeughersteller vorgeschrieben ist
- ATE SL.6 ist optimal für ESP®, ABS und ASR: dünnflüssig auch bei niedrigen Temperaturen, schnelle Reaktionszeit
- Siedepunkte und Viskosität übertreffen gesetzliche und technische Anforderungen
- Schutz vor Korrosion durch hochwertige Additive

Die Eigenschaften von ATE Bremsflüssigkeiten

	Siedepunkt	Nasssiedepunkt	Viskosität bei –40 °C	Wechselintervall
ATE SUPER DOT 5.1	min. 265 °C	min. 180 °C	max. 750 mm²/s	bis 3 Jahre
ATE TYP 200 DOT 4 Racing-Qualität	min. 280 °C	min. 198 °C	max. 1.400 mm²/s	bis 3 Jahre
ATE SL.6 DOT 4 Ideal für ESP®, ABS, ASR	min. 265 °C	min. 175 °C	max. 700 mm²/s	bis 2 Jahre
ATE SL DOT 4	min. 260 °C	min. 165 °C	max. 1.400 mm²/s	bis 1 Jahr
ATE G DOT 3	min. 245 °C	min. 150 °C	max. 1.500 mm²/s	bis 1 Jahr

Zur Erhaltung der Funktionssicherheit der Bremsanlage muss Bremsflüssigkeit entsprechend der vom Fahrzeughersteller vorgegebenen Qualität und in den angegebenen Wechselintervallen ausgetauscht werden.

© 2023 Continental Aftermarket & Services GmbH

Servicegeräte

Natürlich bieten wir auch Geräte für Tests, Entlüftung und Entsorgung von Bremsflüssigkeiten an. Sie arbeiten exakt und zuverlässig, sind leicht zu bedienen und technologisch auf dem neuesten Stand.

Erfahren Sie mehr über ATE Bremsflüssigkeiten auf www.ate.de/bremsfluessigkeit sowie über unsere Servicegeräte auf www.ate-info.de

Typ		ATE Sachnummer	EAN-Nr. 4006633	Gebinde	Paletteneinheit
SUPER DOT 5.1	SAE-Spezifikation, J1704-FMVSS 116/DOT 5.1 ISO Klasse 5-1 – **niedrigviskos**	**706602** 03.9901-6602.2	45757 6	1 l	600 Kannen[2]
		706603 03.9901-6603.2	45759 0	5 l	400 Kannen[3]
		706611 03.9901-6611.2	45761 3	20 l	36 Kannen
TYP 200	SAE-Spezifikation, J1704-FMVSS 116/DOT 4	**706202** 03.9901-6202.2	10825 6	1 l	600 Kannen[2]
		706203 03.9901-6203.2	12166 8	5 l	400 Kannen[3]
		706220 03.9901-6220.2	12780 6	30 l	22 Kannen
SL.6	SAE-Spezifikation, J1704-FMVSS 116/DOT 4 ISO-Klasse 6 – **niedrigviskos**	**706402** 03.9901-6402.2	20746 1	1 l	600 Kannen[2]
		706403 03.9901-6403.2	20748 5	5 l	400 Kannen[3]
		706411 03.9901-6411.2	20750 8	20 l	36 Kannen
		706420 03.9901-6420.2	23120 6	30 l	22 Kannen
		706414 03.9901-6414.2	23005 6	50 l	12 Kannen
		706405 03.9901-6405.2	23121 3	200 l	1 Stück
SL	SAE-Spezifikation, J1704-FMVSS 116/DOT 4	**705801** 03.9901-5801.2	49001 6	1/2 l	1.200 Kannen[1]
		705802 03.9901-5802.2	49002 3	1 l	600 Kannen[2]
		705803 03.9901-5803.2	49003 0	5 l	400 Kannen[3]
		705811 03.9901-5811.2	29907 7	20 l	12 Kannen
		705820 03.9901-5820.2	10824 9	30 l	22 Kannen
		705814 03.9901-5814.2	10366 4	50 l	12 Kannen
		705805 03.9901-5805.2	49005 4	200 l	1 Stück
G	SAE-Spezifikation, J1703-FMVSS 116/DOT 3	**705302** 03.9901-5302.2	10199 8	1 l	600 Kannen[2]
		705303 03.9901-5303.2	10201 8	5 l	400 Kannen[3]

Abweichende Artikelnummern für Lieferländer außerhalb Deutschlands möglich.

Paletteneinheit:
[1] 20 Kannen je Karton
[2] 10 Kannen je Karton
[3] 4 Kannen je Karton

© 2023 Continental Aftermarket & Services GmbH

Top quality for optimum performance.

NEW: SUPER DOT 5.1

The new premium ATE SUPER DOT 5.1 brake fluid with optimum performance in both hot and cold conditions: 5 ºC higher wet boiling point than ATE SL.6, same excellent viscosity, longer change interval, ideal for vehicles with advanced driver assistance systems like ESP®, ABS and ASR.

Wide selection for all applications

- ATE SL as a proven DOT 4 grade, ATE TYPE 200 for racing enthusiasts and ATE DOT 3 G for classic cars and vehicles for which the manufacturer specifies a DOT 3 brake fluid
- ATE SL.6 is optimal for ESP®, ABS and ASR: low viscosity even at low temperatures, with a fast reaction time
- Boiling points and viscosities are better than in statutory and technical regulations
- Protection from corrosion by high-grade additives

Properties of ATE brake fluids

	Boiling point	Wet boiling point	Viscosity at –40 ºC	Change interval
ATE SUPER DOT 5.1	min. 265 ºC / 509 ºF	min. 180 ºC / 356 ºF	max. 750 mm²/s	up to 3 years
ATE TYPE 200 DOT 4 Racing quality	min. 280 ºC / 536 ºF	min. 198 ºC / 388 ºF	max. 1,400 mm²/s	up to 3 years
ATE SL.6 DOT 4 Ideal for ESP®, ABS, ASR	min. 265 ºC / 509 ºF	min. 175 ºC / 347 ºF	max. 700 mm²/s	up to 2 years
ATE SL DOT 4	min. 260 ºC / 500 ºF	min. 165 ºC / 329 ºF	max. 1,400 mm²/s	up to 1 year
ATE G / ATE Blue DOT 3	min. 245 ºC / 473 ºF	min. 150 ºC / 302 ºF	max. 1,500 mm²/s	up to 1 year

To maintain the operational reliability and safety of the brake system, you must change the brake fluid in accordance with the vehicle manufacturer's recommendations on quality and at the specified change intervals.

© 2023 Continental Aftermarket & Services GmbH

Service units

Of course we also offer devices for testing, bleeding and disposing of brake fluids. The devices work accurately and reliably, are easy to use and their technology is state-of-the-art.

To learn more about ATE brake fluids go to www.ate.de/bremsfluessigkeit. Information on our service units is available at www.ate-info.de

Type	ATE item code		Language variations	Container	Pallet unit
SUPER DOT 5.1 SAE specification, J1704-FMVSS 116/DOT 5.1 ISO Class 5-1 – **low viscosity**	**706602**	03.9901-6602.2	DE, EN, ES, PT, CN, FR, IT, AR, SE, NL, JP, TH, GR	1 L	600 cans[2]
	706612	03.9901-6612.2	PL, RU, CZ, SK, SLO, HU, BG, KA, HR, SR, RO	1 L	600 cans[2]
	706603	03.9901-6603.2	DE, EN, ES, PT, CN, FR, IT, AR, SE, NL, JP, TH, GR, PL, RU, CZ, SK, SLO, HU, BG, KA, HR, SR, RO	5 L	400 cans[3]
	706611	03.9901-6611.2	DE, EN, ES, PT, CN, FR, IT, AR, SE, NL, JP, TH, GR, PL, RU, CZ, SK, SLO, HU, BG, KA, HR, SR, RO	20 L	36 cans
TYP 200 SAE specification, J1704-FMVSS 116/DOT 4	**706202**	03.9901-6202.2	DE, EN, ES, PT, CN, FR, IT, AR, SE, NL, JP, TH, GR	1 L	600 cans[2]
	706212	03.9901-6212.2	PL, RU, CZ, SK, SLO, HU, BG, KA, HR, SR, RO	1 L	600 cans[2]
	706203	03.9901-6203.2	DE, EN, PL, ES, CN, FR, IT, RO, AR, SE, RU, HR, SR, CZ, SK, SLO, GR, HU, JP, TH, BG, NL, PT, KA, DK, FI, SQ, TR, LV, NO, LT, MS, HY	5 L	400 cans[3]
	706220	03.9901-6220.2	DE, EN, PL, ES, CN, FR, IT, RO, AR, SE, RU, HR, SR, CZ, SK, SLO, GR, HU, JP, TH, BG, NL, PT, KA, DK, FI, SQ, TR	30 L	22 cans
SL.6 SAE specification, J1704-FMVSS 116/DOT 4 ISO Class 6 – **low viscosity**	**706402**	03.9901-6402.2	DE, EN, ES, PT, CN, FR, IT, AR, SE, NL, JP, TH, GR	1 L	600 cans[2]
	706432	03.9901-6432.2	PL, RU, CZ, SK, SLO, HU, BG, KA, HR, SR, RO	1 L	600 cans[2]
	706403	03.9901-6403.2	DE, EN, PL, ES, CN, FR, IT, RO, AR, SE, RU, HR, SR, CZ, SK, SLO, GR, HU, JP, TH, BG, NL, PT, KA, DK, FI, SQ, TR, LV, NO, LT, MS, HY	5 L	400 cans[3]
	706411	03.9901-6411.2	DE, EN, PL, ES, CN, FR, IT, RO, AR, SE, RU, HR, SR, CZ, SK, SLO, GR, HU, JP, TH, BG, NL, PT, KA, DK, FI, SQ, TR, LV	20 L	36 cans
	706420	03.9901-6420.2	DE, EN, PL, ES, CN, FR, IT, RO, AR, SE, RU, HR, SR, CZ, SK, SLO, GR, HU, JP, TH, BG, NL, PT, KA, DK, FI, SQ, TR	30 L	22 cans
	706414	03.9901-6414.2	DE, EN, PL, ES, CN, FR, IT, RO, AR, SE, RU, HR, SR, CZ, SK, SLO, GR, HU, JP, TH, BG, NL, PT, KA, DK, FI, SQ, TR	50 L	12 cans
	706405	03.9901-6405.2	DE, EN, PL, ES, CN, FR, IT, RO, AR, SE, RU, HR, SR, CZ, SK, SLO, GR, HU, JP, TH, BG, NL, PT, KA, DK, FI, SQ, TR	200 L	1 item
SL SAE specification, J1704-FMVSS 116/DOT 4	**705801**	03.9901-5801.2	DE, EN, ES, AR, TH, CN	1/2 L	1,200 cans[1]
	705831	03.9901-5831.2	PL, RO, RU, HR, SLO, KA	1/2 L	1,200 cans[2]
	705802	03.9901-5802.2	DE, EN, ES, PT, CN, FR, IT, AR, SE, NL, JP, TH, GR	1 L	600 cans[2]
	705832	03.9901-5832.2	PL, RU, CZ, SK, SLO, HU, BG, KA, HR, SR, RO	1 L	600 cans[2]
	705803	03.9901-5803.2	DE, EN, PL, ES, CN, FR, IT, RO, AR, SE, RU, HR, SR, CZ, SK, SLO, GR, HU, JP, TH, BG, NL, PT, KA, DK, FI, SQ, TR, LV, NO, LT, MS, HY	5 L	400 cans[3]
	705811	03.9901-5811.2	DE, EN, PL, ES, CN, FR, IT, RO, AR, SE, RU, HR, SR, CZ, SK, SLO, GR, HU, JP, TH, BG, NL, PT, KA, DK, FI, SQ, TR, LV	20 L	12 cans
	705820	03.9901-5820.2	DE, EN, PL, ES, CN, FR, IT, RO, AR, SE, RU, HR, SR, CZ, SK, SLO, GR, HU, JP, TH, BG, NL, PT, KA, DK, FI, SQ, TR	30 L	22 cans
	705814	03.9901-5814.2	DE, EN, PL, ES, CN, FR, IT, RO, AR, SE, RU, HR, SR, CZ, SK, SLO, GR, HU, JP, TH, BG, NL, PT, KA, DK, FI, SQ, TR	50 L	12 cans
	705805	03.9901-5805.2	DE, EN, PL, ES, CN, FR, IT, RO, AR, SE, RU, HR, SR, CZ, SK, SLO, GR, HU, JP, TH, BG, NL, PT, KA, DK, FI, SQ, TR	200 L	1 item
G SAE specification, J1703-FMVSS 116/DOT 3	**705302**	03.9901-5302.2	–	1 L	600 cans[2]
	705303	03.9901-5303.2	–	5 L	400 cans[3]
BLUE SAE specification, J1703-FMVSS 116/DOT 3	**700301**	03.9901-0301.2	–	1/2 L	1,200 cans[2]
	700302	03.9901-0302.2	–	1 L	600 cans[2]

Item codes may be different for countries of delivery other than Germany.

Pallet unit: [1] 20 cans per box, [2] 10 cans per box, [3] 4 cans per box

© 2023 Continental Aftermarket & Services GmbH

EN Table of contents

Index of vehicles 8
Product details 10
Applications of vehicles 19
Technical translations 32

DE Inhaltsverzeichnis

Herstellerverzeichnis 8
Produktdetails 10
Fahrzeugverwendungen 19
Technische Übersetzungen 32

ES Índice

Índice de véhiculos 8
Descripción del producto 10
Aplicaciones 19
Traducciones tecnicas 32

FR Table des matières

Liste des véhicules 8
Présentation du produit 10
Applications 19
Traductions techniques 32

IT Sommario

Indice autovetture 8
Panoramica prodotti 10
Applicazioni autoveicoli 19
Traduzioni tecniche 32

© 2023 Continental Aftermarket & Services GmbH

EN Index of vehicles

DE Herstellerverzeichnis

ES Índice de véhiculos

FR Liste des véhicules

IT Indice autovetture

© 2023 Continental Aftermarket & Services GmbH

DACIA 20

LOGAN II 20
SANDERO II 20

FORD 20

FOCUS IV (HN) 20
FOCUS IV Turnier (HP) 20
KUGA III (DFK) 20
TOURNEO CUSTOM V362 Bus (F3) 20
TRANSIT CUSTOM V362 Bus (F3) 20
TRANSIT CUSTOM V362 Van (FY, FZ) 20
TRANSIT V363 Bus (FAD, FBD) 21
TRANSIT V363 Platform/Chassis (FED, FFD) 21
TRANSIT V363 Van (FCD, FDD) 21

HONDA 21

HR-V (RU) 22

HYUNDAI 22

i10 I (PA) 22
i10 II (BA, IA) 22
i10 III (AC3, AI3) 22
i10 II Saloon 22

MAZDA 22

3 (BM, BN) 22
3 Hatchback (BP) 22
3 Hatchback Van (BM) 22
3 Saloon (BM_, BN_) 22
3 Saloon (BP_) 22
6 Estate (GJ, GL) 23
6 Estate Van (GJ) 23
6 Saloon (GJ, GL) 23
CX-3 (DK) 23
CX-30 (DM) 23

MERCEDES-BENZ 23

A-CLASS (W177) 24
A-CLASS Saloon (V177) 24
B-CLASS Sports Tourer (W247) 24
CITAN Box Body/MPV (W415) 24
CITAN Mixto (Double Cabin) (W415) 24
CITAN MPV (W415) 25
CLA (C118) 25
CLA Shooting Brake (X118) 25
CLS (C218) 25
CLS Shooting Brake (X218) 25
E-CLASS (W212) 26
E-CLASS T-Model (S212) 26
EQA (H243) 26
EQB (X243) 26
GLA (H247) 26
GLB (X247) 26
GLE (V167) 26

RENAULT 26

KANGOO / GRAND KANGOO II (KW0/1_) 26
KANGOO BE BOP (KW0/1_) 27
KANGOO Express (FC0/1_) 27
KANGOO Express (FW0/1_) 27
LOGAN II Estate (K8_) 27
SANDERO/STEPWAY II (B8_) 27

SEAT 27

LEON (5F1) 27
LEON Hatchback Van (5F1) 28
LEON SC (5F5) 28
LEON ST (5F8) 28
LEON ST Estate Van (5F8) 28

SKODA 29

OCTAVIA III (5E3, NL3, NR3) 29
OCTAVIA III Combi (5E5, 5E6) 29

TOYOTA 29

YARIS (_P13_) 29
YARIS Hatchback Van (_P13_) 30

VOLVO 30

XC40 (536) 30

VW 30

CALIFORNIA T5 Camper (7EC, 7EF, 7EG, 7HF) 30
MULTIVAN V (7HM, 7HN, 7HF, 7EF, 7EM, 7EN) 30
TRANSPORTER V Bus (7HB, 7HJ, 7EB, 7EJ) 30
TRANSPORTER V Platform/Chassis (7JD, 7JE, 7JL, 7JY, 7JZ, 7FD 31
TRANSPORTER V Van (7HA, 7HH, 7EA, 7EH) 31

© 2023 Continental Aftermarket & Services GmbH

EN Product details

DE Produktdetails

ES Descripción del producto

FR Présentation du produit

IT Panoramica prodotti

© 2023 Continental Aftermarket & Services GmbH

03.9302-1503.4 740335

Filling/Bleeding Unit, brake hydraulics

→ to holder size [l]: 5

Filling hose length [m]: 3.5

Content [litre] 5

+ UK

Electric-pneumatic

13.0460-2641.2 602641

Brake Pad Set, disc brake

Height 2 [mm]: 62.9

Thickness [mm] 19.1

Width [mm] 116.9

TRW

Observe dimensions

+ WE / - WK

+ Zub

Height 1 [mm]: 53

with brake caliper screws

MERCEDES-BENZ

13.0460-5522.2 605522

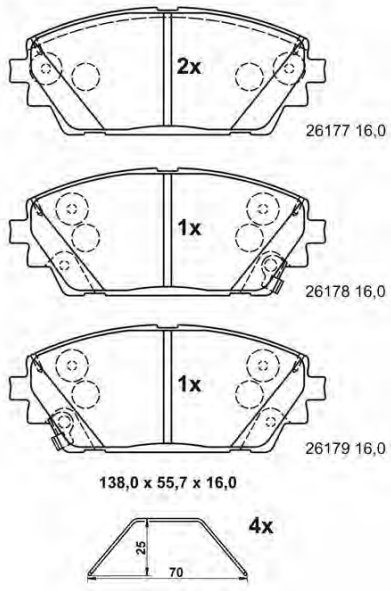

Brake Pad Set, disc brake

+ WK

+ Zub

Thickness [mm] 16

Width [mm] 138

Height [mm] 55.7

MAZDA

13.0460-5552.2 605552

Brake Pad Set, disc brake

Thickness [mm] 16.6

Width [mm] 132.5

Height [mm] 50.1

MAN

Observe dimensions

+ WK

+ Zub

with anti-squeak plate

HYUNDAI

13.0460-7358.2 607358

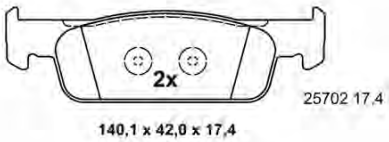

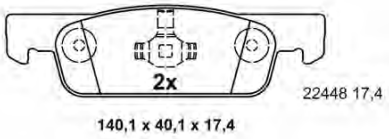

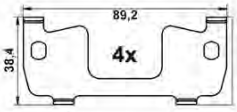

Brake Pad Set, disc brake

Height 2 [mm]: 42

Thickness [mm] 17.4

Width [mm] 140.1

ATE

- WE / - WK

Height 1 [mm]: 40.1

with anti-squeak plate

DACIA, RENAULT

13.0460-7361.2 607361

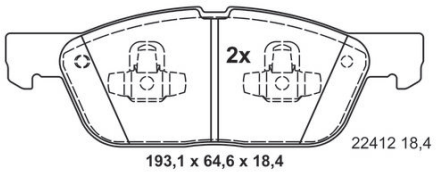

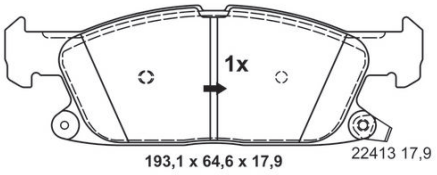

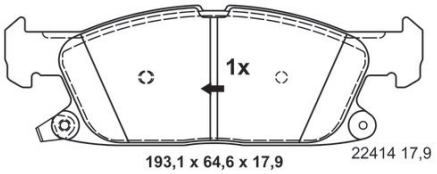

Brake Pad Set, disc brake

+ WK

Thickness 2 [mm] 17.9

Thickness 1 [mm] 18.4

Width [mm] 193.1

Height [mm] 64.6

FORD

© 2023 Continental Aftermarket & Services GmbH

13.0470-2641.2 LD2641

Brake Pad Set, disc brake

Height 2 [mm]: 62.9
Thickness [mm] 19.1
Width [mm] 116.9
TRW
Observe dimensions
+ WE / - WK
+ Zub
Height 1 [mm]: 53
with brake caliper screws

MERCEDES-BENZ

13.0470-2744.2 LD2744

ATE Ceramic

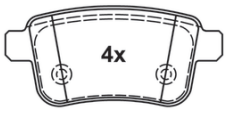

24692 15,9

95,4 x 43,8 x 15,9

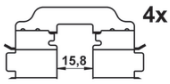

Brake Pad Set, disc brake

Thickness [mm] 15.9
Width [mm] 95.4
Height [mm] 43.8
TRW
- WE / - WK
+ Zub
with brake caliper screws

MERCEDES-BENZ, RENAULT

13.0470-4863.2 LD4863

Brake Pad Set, disc brake

Thickness [mm] 17.5
Width [mm] 141.5
Height [mm] 79.8
BRE
+ WE / - WK

MERCEDES-BENZ

© 2023 Continental Aftermarket & Services GmbH

13.0470-5520.2 LD5520

ATE Ceramic

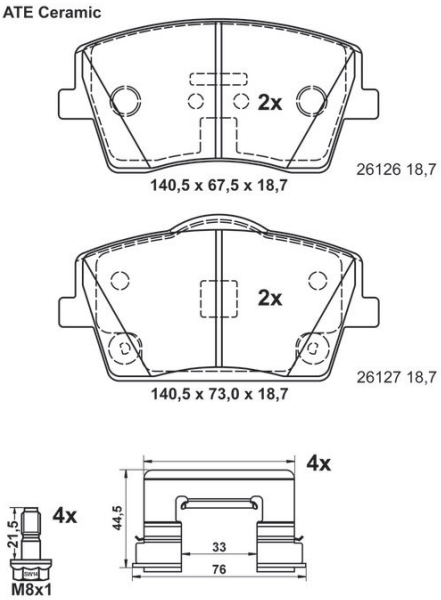

Brake Pad Set, disc brake

Height 2 [mm]: 73

Thickness [mm] 18.7

Width [mm] 140.5

- WE / without acoustic wear warning

+ Zub

Height 1 [mm]: 57.5

with brake caliper screws

VOLVO

13.0470-5522.2 LD5522

ATE Ceramic

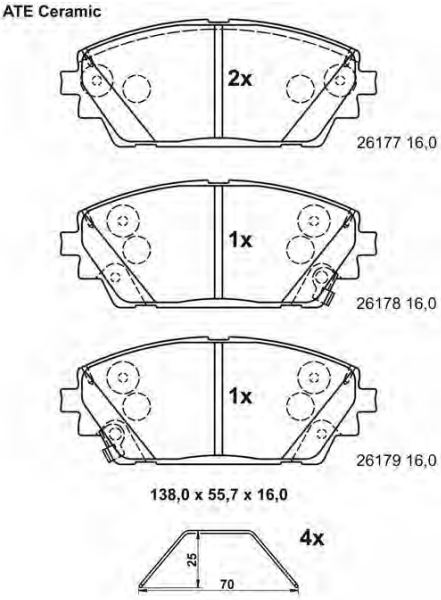

Brake Pad Set, disc brake

Thickness [mm] 16

Width [mm] 138

Height [mm] 55.7

+ WK

+ Zub

MAZDA

13.0470-5658.2 LD5658

ATE Ceramic

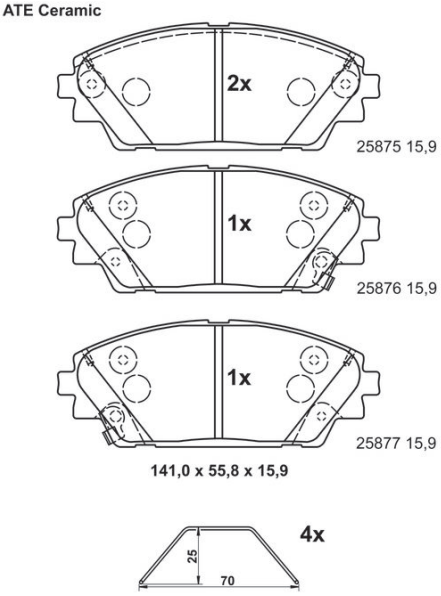

Brake Pad Set, disc brake

Thickness [mm] 15.9

Width [mm] 141

Height [mm] 55.8

AKE

+ WK

+ Zub

Article number of recommended accessories: 13.0460-0531.2

MAZDA

© 2023 Continental Aftermarket & Services GmbH

24.0109-0185.1 409185

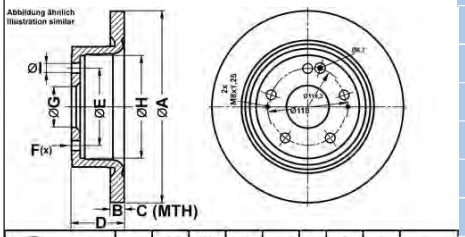

A	B	C	D	E	F(x)	G	H	I
282,0	9,0	8,0	48,7	114,3	5	64,2	156,5	12,8

Brake Disc

Bolt Hole Circle Ø [mm]: 114.3
Bore Ø [mm] 12.8
Number of Holes: 5
Centering Diameter [mm]: 64.2
Minimum thickness [mm] 8
Height [mm] 48.7
Brake Disc Thickness [mm] 9
Ø 156
Ø 282
SurfaceB

HONDA

24.0110-0421.1 410421

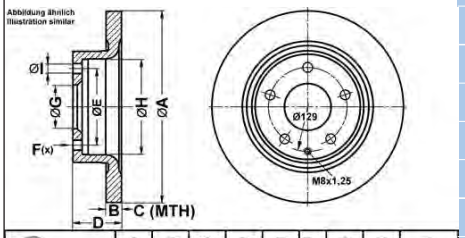

A	B	C	D	E	F(x)	G	H	I
278,0	10,0	8,0	39,5	114,3	5	68,0	143,0	13,2

Brake Disc

Bolt Hole Circle Ø [mm]: 114.3
Bore Ø [mm] 13.2
Number of Holes: 5
Centering Diameter [mm]: 68
Minimum thickness [mm] 8
Height [mm] 39.5
Brake Disc Thickness [mm] 10
Ø 143
Ø 278
SurfaceB

MAZDA

24.0128-0327.1 428327

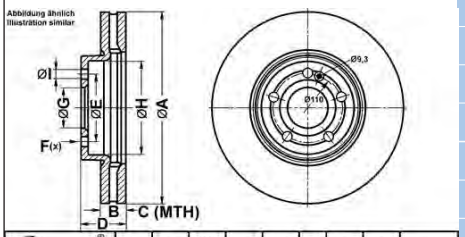

A	B	C	D	E	F(x)	G	H	I
305,0	28,0	25,4	51,0	111,5	5	67,0	155,0	15,4

Brake Disc

Bolt Hole Circle Ø [mm]: 111.5
Bore Ø [mm] 15.4
Number of Holes: 5
Centering Diameter [mm]: 67
Minimum thickness [mm] 25.4
Height [mm] 51
Machining: HC
Brake Disc Thickness [mm] 28
Vented
Ø 155
Ø 305
SurfaceB
+ S

MERCEDES-BENZ

© 2023 Continental Aftermarket & Services GmbH

24.0130-0262.1 430262

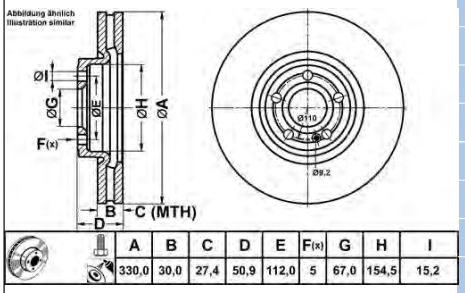

A	B	C	D	E	F(x)	G	H	I
330,0	30,0	27,4	50,9	112,0	5	67,0	154,5	15,2

Brake Disc

Bolt Hole Circle Ø [mm]: 112

Bore Ø [mm] 15.2

Number of Holes: 5

Centering Diameter [mm]: 67

Minimum thickness [mm] 27.4

Height [mm] 50.9

Machining: HC

Brake Disc Thickness [mm] 30

Vented

Ø 154.5

Ø 330

SurfaceB

+ S

MERCEDES-BENZ

24.3484-1705.5 241503

Brake Caliper

BOS

Piston Diameter [mm]: 48

Service exchange part

without holder

FORD

24.3484-1706.5 241504

Brake Caliper

BOS

Piston Diameter [mm]: 48

Service exchange part

without holder

FORD

24.3727-3410.2 583410

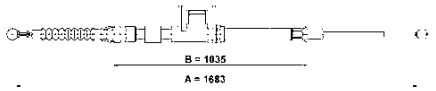

Cable Pull, parking brake

L= 1,638

SEAT

© 2023 Continental Aftermarket & Services GmbH

24.3727-3411.2 583411

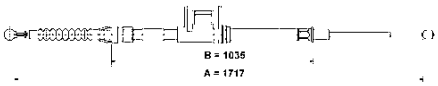

Cable Pull, parking brake

L= 1,717

SEAT

24.3727-3412.2 583412

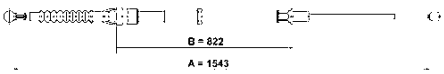

Cable Pull, parking brake

L= 1,717

SKODA

24.3727-3413.2 583413

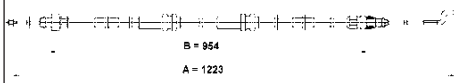

Cable Pull, parking brake

L= 1,223

VW

24.5265-0504.3 331635

Brake Hose

Flange Hole Diameter [mm]: 10

L= 530

without hollow screw

TOYOTA

© 2023 Continental Aftermarket & Services GmbH

Notes

© 2023 Continental Aftermarket & Services GmbH

EN Applications of vehicles

DE Fahrzeugverwendungen

ES Aplicaciones

FR Applications

IT Applicazioni autoveicoli

© 2023 Continental Aftermarket & Services GmbH

	kW				! #			
DACIA - LOGAN II 10/12→								
Brake Pad Set, disc brake								
1.2 1.2 LPG TCe 90 TCe 90 LPG	54 - 55 53 - 55 66 66	10/12→ 10/12→ 10/12→ 09/15→	←	Equipment Code: SAN713 / ENPD01		**13.0460-7358.2**	**607358**	ATE - WE / - WK
1.6	59 - 63	06/13→	←	Equipment Code: ENPC01 / ENPD01		**13.0460-7358.2**	**607358**	ATE - WE / - WK
1.6 16V	77	01/13→	←	Equipment Code: SAN713 / ENPC01 / ENPD01		**13.0460-7358.2**	**607358**	ATE - WE / - WK
DACIA - SANDERO II 10/12→								
Brake Pad Set, disc brake								
1.0 SCe 75 1.2	54 54	12/16→ 05/15→	←	Equipment Code: VSUVE / SAN713 / ENPD01		**13.0460-7358.2**	**607358**	ATE - WE / - WK
1.2 1.2 LPG 1.5 dCi 1.5 dCi 75 / Blue dCi 75 1.6 TCe 90	55 55 63 - 66 55 63 66	10/12→ 10/12→ 10/12→ 10/12→ 11/12→ 10/12→	← ←	04/15→; Equipment Code: ENPD01 Equipment Code: SAN713 / ENPD01		**13.0460-7358.2** **13.0460-7358.2**	**607358** **607358**	ATE - WE / - WK ATE - WE / - WK
TCe 90 LPG	66	09/15→	←	Equipment Code: SAN713 / VSUVE / ENPD01		**13.0460-7358.2**	**607358**	ATE - WE / - WK
FORD - FOCUS IV (HN) 01/18→								
Brake Pad Set, disc brake								
2.0 ST EcoBlue 2.3 ST EcoBoost	140 206	04/19→ 04/19→	←			**13.0460-7361.2**	**607361**	+ WK
FORD - FOCUS IV Turnier (HP) 09/18→								
Brake Pad Set, disc brake								
2.0 ST EcoBlue 2.3 ST EcoBoost	140 206	04/19→ 04/19→	←			**13.0460-7361.2**	**607361**	+ WK
FORD - KUGA III (DFK) 07/19→								
Brake Pad Set, disc brake								
2.5 Duratec Plug-in-Hybrid 2.5 FHEV 2.5 FHEV 4x4	165 140 140	07/19→ 01/21→ 01/21→	←			**13.0460-7361.2**	**607361**	+ WK
FORD - TOURNEO CUSTOM V362 Bus (F3) 04/12→								
Brake Caliper								
2.0 EcoBlue	77 - 125	12/15→	→	→ 04/16; not for trim level: 290S Sport;		**24.3484-1705.5**	**241503**	BOS without holder
			→	→ 04/16; not for trim level: 290S Sport;		**24.3484-1706.5**	**241504**	BOS without holder
2.2 TDCi	74 - 114	04/12→12/15	→	05/12→; not for trim level: 290S Sport;		**24.3484-1705.5**	**241503**	BOS without holder
			→	05/12→; not for trim level: 290S Sport;		**24.3484-1706.5**	**241504**	BOS without holder
FORD - TRANSIT CUSTOM V362 Bus (F3) 04/12→								
Brake Caliper								
2.0 EcoBlue	77 - 125	12/15→	→	→ 04/16; not for trim level: 290S Sport;		**24.3484-1705.5**	**241503**	BOS without holder
			→	→ 04/16; not for trim level: 290S Sport;		**24.3484-1706.5**	**241504**	BOS without holder
2.2 TDCi	74 - 114	04/12→12/15	→	05/12→; not for trim level: 290S Sport;		**24.3484-1705.5**	**241503**	BOS without holder
			→	05/12→; not for trim level: 290S Sport;		**24.3484-1706.5**	**241504**	BOS without holder
FORD - TRANSIT CUSTOM V362 Van (FY, FZ) 09/12→								
Brake Caliper								
2.0 EcoBlue	77 - 125	12/15→	→	→ 04/16; not for trim level: 290S Sport;		**24.3484-1705.5**	**241503**	BOS without holder
			→	→ 04/16; not for trim level: 290S Sport;		**24.3484-1706.5**	**241504**	BOS without holder
→								

© 2023 Continental Aftermarket & Services GmbH

	kW				! #			
FORD - TRANSIT CUSTOM V362 Van (FY, FZ) 09/12→								
Brake Caliper								
2.2 TDCi	74 - 114	09/12→04/16		not for trim level: 290S Sport;		**24.3484-1705.5**	**241503**	BOS without holder
				not for trim level: 290S Sport;		**24.3484-1706.5**	**241504**	BOS without holder
FORD - TRANSIT V363 Bus (FAD, FBD) 08/13→								
Brake Caliper								
2.0 EcoBlue	77 - 125	03/16→		Code: 10/60/70/80/90/250 / 300; for single tyres;		**24.3484-1705.5**	**241503**	BOS without holder
2.2 TDCi	74 - 114	08/13→12/18		Code: 10/60/70/80/90/250 / 300; for single tyres;		**24.3484-1706.5**	**241504**	BOS without holder
2.2 TDCi 4x4	92	08/13→12/18						
2.2 TDCi All-wheel Drive	114	08/15→12/18						
2.2 TDCi RWD	92 - 114	08/13→12/18						
2.0 EcoBlue	110	10/21→		Code: 250/260/270/280 / 290/300/310; for single tyres;		**24.3484-1705.5**	**241503**	BOS without holder
2.0 EcoBlue mHEV	96 - 125	05/19→						
2.0 EcoBlue RWD	125	05/19→		Code: 250/260/270/280 / 290/300/310; for single tyres;		**24.3484-1706.5**	**241504**	BOS without holder
2.0 EcoBlue RWD	96	05/19→		Code: 250/260/270/280 / 290/300/310;		**24.3484-1705.5**	**241503**	BOS without holder
				Code: 250/260/270/280 / 290/300/310;		**24.3484-1706.5**	**241504**	BOS without holder
2.2 TDCi RWD	74	08/13→12/18		05/14→; Code: 10/60/70/80/90/250 / 300; for single tyres;		**24.3484-1705.5**	**241503**	BOS without holder
				05/14→; Code: 10/60/70/80/90/250 / 300; for single tyres;		**24.3484-1706.5**	**241504**	BOS without holder
FORD - TRANSIT V363 Platform/Chassis (FED, FFD) 08/13→								
Brake Caliper								
2.0 EcoBlue	77 - 125	03/16→		Code: 10/60/70/80/90/250 / 300; for single tyres;		**24.3484-1705.5**	**241503**	BOS without holder
2.0 EcoBlue 4x4	96 - 125	01/17→		Code: 10/60/70/80/90/250 / 300; for single tyres;		**24.3484-1706.5**	**241504**	BOS without holder
2.0 EcoBlue RWD	77 - 125	03/16→						
2.2 TDCi	74 - 92	08/13→12/18						
2.2 TDCi 4x4	92 - 114	08/13→12/18						
2.2 TDCi RWD	74 - 114	08/13→12/18						
2.0 EcoBlue	118 - 136	05/19→		Code: 250/260/270/280 / 290/300/310; for single tyres;		**24.3484-1705.5**	**241503**	BOS without holder
2.0 EcoBlue mHEV	96 - 125	05/19→		Code: 250/260/270/280 / 290/300/310; for single tyres;		**24.3484-1706.5**	**241504**	BOS without holder
2.0 EcoBlue mHEV RWD	96 - 125	05/19→						
2.0 EcoBlue RWD	136	05/19→						
E-TRANSIT	135 - 198	03/22→						
2.2 TDCi	114	08/13→12/18		05/14→; Code: 10/60/70/80/90/250 / 300; for single tyres;		**24.3484-1705.5**	**241503**	BOS without holder
				05/14→; Code: 10/60/70/80/90/250 / 300; for single tyres;		**24.3484-1706.5**	**241504**	BOS without holder
FORD - TRANSIT V363 Van (FCD, FDD) 08/13→								
Brake Caliper								
2.0 EcoBlue	77 - 125	03/16→		Code: 10/60/70/80/90/250 / 300; for single tyres;		**24.3484-1705.5**	**241503**	BOS without holder
2.0 EcoBlue 4x4	96 - 125	01/17→		Code: 10/60/70/80/90/250 / 300; for single tyres;		**24.3484-1706.5**	**241504**	BOS without holder
2.0 EcoBlue RWD	77 - 125	03/16→						
2.2 TDCi	74 - 114	08/13→12/18						
2.2 TDCi 4x4	92 - 114	08/13→12/18						
2.2 TDCi RWD	74 - 114	08/13→12/18						
2.0 EcoBlue	118 - 136	05/19→		Code: 250/260/270/280 / 290/300/310; for single tyres;		**24.3484-1705.5**	**241503**	BOS without holder
2.0 EcoBlue mHEV	96 - 125	05/19→		Code: 250/260/270/280 / 290/300/310; for single tyres;		**24.3484-1706.5**	**241504**	BOS without holder
2.0 EcoBlue mHEV RWD	96 - 125	05/19→						
2.0 EcoBlue RWD	136	05/19→						
E-TRANSIT	135 - 198	03/22→						

	kW				! #			
HONDA - HR-V (RU) 11/14→								
Brake Disc								
1.5 1.5 i-VTEC 1.6 i-DTEC 1.8	88 - 96 134 88 104	01/15→ 04/19→ 08/15→ 11/14→	➡			**24.0109-0185.1**	**409185**	Ø 282 Brake Disc Thickness [mm] 9 Minimum thickness [mm] 8
HYUNDAI - i10 I (PA) 10/07→								
Brake Pad Set, disc brake								
1.2	64	12/15→	⬅			**13.0460-5552.2**	**605552**	MAN + WK + Zub
HYUNDAI - i10 II (BA, IA) 08/13→								
Brake Pad Set, disc brake								
1.0 1.0 LPG	49 51	08/13→ 07/14→08/16	⬅	Rim Size [in]: 13 / 14		**13.0460-5552.2**	**605552**	MAN + WK + Zub
1.0 LPG 1.2	49 64	02/14→ 12/13→	⬅	Rim Size [in]: 13		**13.0460-5552.2**	**605552**	MAN + WK + Zub
HYUNDAI - i10 II Saloon 12/13→								
Brake Pad Set, disc brake								
1.2	64	08/15→	⬅	Rim Size [in]: 14		**13.0460-5552.2**	**605552**	MAN + WK + Zub
HYUNDAI - i10 III (AC3, AI3) 09/19→								
Brake Pad Set, disc brake								
1.0 MPi 1.2 MPi	49 62	09/19→ 09/19→	⬅			**13.0460-5552.2**	**605552**	MAN + WK + Zub
MAZDA - 3 (BM, BN) 07/13→								
Brake Pad Set, disc brake								
1.5 1.5 D 1.6 2.0 2.2 D	74 - 88 77 77 88 - 121 110	09/13→05/19 02/16→05/19 09/13→05/19 07/13→05/19 09/13→05/19	⬅			**13.0470-5658.2**	**LD5658**	AKE + WK + Zub Ceramic
MAZDA - 3 Hatchback (BP) 11/18→								
Brake Pad Set, disc brake								
1.5 SKYACTIV-G 1.8 SKYACTIV-D 2.0 SKYACTIV-G 2.0 SKYACTIV-G M Hybrid SKYACTIV-X M Hybrid SKYACTIV-X M Hybrid AWD	88 85 110 90 - 110 132 - 137 132 - 137	11/18→ 01/19→ 11/18→ 11/18→ 06/19→ 06/19→	⬅			**13.0460-5522.2** **13.0470-5522.2**	**605522** **LD5522**	+ WK + Zub + WK + Zub Ceramic
MAZDA - 3 Hatchback Van (BM) 04/15→05/16								
Brake Pad Set, disc brake								
1.5 2.0 2.2 D	74 88 - 121 110	04/15→05/16 04/15→05/16 04/15→05/16	⬅			**13.0470-5658.2**	**LD5658**	AKE + WK + Zub Ceramic
MAZDA - 3 Saloon (BM_, BN_) 09/13→12/19								
Brake Pad Set, disc brake								
1.5 1.5 D 1.6 2.0 2.2 D	74 - 88 77 77 88 - 121 110	10/13→05/19 06/16→05/19 09/13→05/19 09/13→05/19 09/13→05/19	⬅			**13.0470-5658.2**	**LD5658**	AKE + WK + Zub Ceramic
MAZDA - 3 Saloon (BP_) 11/18→								
Brake Pad Set, disc brake								
1.5 SKYACTIV-G 1.8 SKYACTIV-D 2.0 SKYACTIV-G M Hybrid →	88 85 90 - 110	11/18→ 01/19→ 11/18→	⬅			**13.0460-5522.2** **13.0470-5522.2**	**605522** **LD5522**	+ WK + Zub + WK + Zub Ceramic

© 2023 Continental Aftermarket & Services GmbH

	kW				! #			
MAZDA - 3 Saloon (BP_) 11/18→								
Brake Pad Set, disc brake								
2.0 SKYACTIV-X M Hybrid	132 - 137	06/19→	←			**13.0460-5522.2** **13.0470-5522.2**	**605522** **LD5522**	+ WK + Zub + WK + Zub Ceramic
MAZDA - 6 Estate (GJ, GL) 08/12→								
Brake Disc								
2.0 2.2 D 2.2 D AWD 2.5	107 - 121 129 - 135 110 - 135 143	12/12→ 07/14→ 12/12→ 03/18→	→			**24.0110-0421.1**	**410421**	Ø 278 Brake Disc Thickness [mm] 10 Minimum thickness [mm] 8
2.2 D 2.5	110 141	12/12→ 12/12→	→	01/13→		**24.0110-0421.1**	**410421**	Ø 278 Brake Disc Thickness [mm] 10 Minimum thickness [mm] 8
2.2 D	129	08/12→02/18	→	12/12→		**24.0110-0421.1**	**410421**	Ø 278 Brake Disc Thickness [mm] 10 Minimum thickness [mm] 8
2.2 D 4WD	129	07/14→	→	02/15→		**24.0110-0421.1**	**410421**	Ø 278 Brake Disc Thickness [mm] 10 Minimum thickness [mm] 8
MAZDA - 6 Estate Van (GJ) 01/13→05/16								
Brake Disc								
2.0 2.2 D 2.2 D AWD 2.5	107 - 121 110 - 129 110 - 129 141	04/15→05/16 04/15→05/16 01/13→05/16 04/15→05/16	→			**24.0110-0421.1**	**410421**	Ø 278 Brake Disc Thickness [mm] 10 Minimum thickness [mm] 8
MAZDA - 6 Saloon (GJ, GL) 12/12→								
Brake Disc								
2.0 2.2 D 2.5	107 - 121 129 - 135 140 - 170	12/12→ 12/12→ 01/13→	→			**24.0110-0421.1**	**410421**	Ø 278 Brake Disc Thickness [mm] 10 Minimum thickness [mm] 8
2.2 D	110	12/12→	→	01/13→		**24.0110-0421.1**	**410421**	Ø 278 Brake Disc Thickness [mm] 10 Minimum thickness [mm] 8
2.2 D 2.2 D 4WD	129 129	07/14→ 07/14→	→	02/15→		**24.0110-0421.1**	**410421**	Ø 278 Brake Disc Thickness [mm] 10 Minimum thickness [mm] 8
MAZDA - CX-3 (DK) 01/15→								
Brake Pad Set, disc brake								
1.5 SKYACTIV-D 1.5 SKYACTIV-D AWD 1.8 SKYACTIV-D 1.8 SKYACTIV-D AWD 2.0 SKYACTIV-G 2.0 SKYACTIV-G AWD	77 77 85 85 88 - 110 109 - 110	02/15→01/18 02/15→01/18 02/18→ 02/18→ 05/15→ 05/15→	←			**13.0470-5658.2**	**LD5658**	AKE + WK + Zub Ceramic
MAZDA - CX-30 (DM) 04/19→								
Brake Pad Set, disc brake								
1.8 SKYACTIV-D 1.8 SKYACTIV-D AWD e-SKYACTIV-X M Hybrid e-SKYACTIV-X M Hybrid AWD SKYACTIV-G M Hybrid SKYACTIV-G M Hybrid AWD SKYACTIV-X M Hybrid SKYACTIV-X M Hybrid AWD	85 85 137 137 90 - 110 90 - 110 132 132	07/19→ 07/19→ 06/21→ 06/21→ 07/19→ 07/19→ 07/19→ 07/19→	←			**13.0470-5658.2**	**LD5658**	AKE + WK + Zub Ceramic

	kW				! #			
MERCEDES-BENZ - A-CLASS (W177) 03/18→								
Brake Disc								
A 160 A 180	80 100	06/18→ 06/18→	←	for vehicles without AMG sports package; for vehicles without sports brake system; Vehicle Main Current: for vehicles with 48V main current		**24.0128-0327.1**	**428327**	Ø 305 Brake Disc Thickness [mm] 28 Minimum thickness [mm] 25.4 Vented + S
			←	for vehicles with AMG Sports Package; for vehicles without sports brake system		**24.0128-0327.1**	**428327**	Ø 305 Brake Disc Thickness [mm] 28 Minimum thickness [mm] 25.4 Vented + S
A 160 d A 180 d	70 85	05/19→ 03/18→	←	for vehicles with AMG Sports Package; for vehicles without sports brake system		**24.0128-0327.1**	**428327**	Ø 305 Brake Disc Thickness [mm] 28 Minimum thickness [mm] 25.4 Vented + S
A 180 d A 200 A 200 4-matic A 200 d A 200 d 4-matic	85 110 - 120 120 110 110	10/20→ 03/18→ 10/20→ 11/18→ 10/19→	←	for vehicles without sports brake system		**24.0128-0327.1**	**428327**	Ø 305 Brake Disc Thickness [mm] 28 Minimum thickness [mm] 25.4 Vented + S
A 250 A 250 4-matic A 250 e	165 165 160	03/18→ 07/18→ 08/19→	←	for vehicles without AMG sports package; for vehicles without sports brake system		**24.0130-0262.1**	**430262**	Ø 330 Brake Disc Thickness [mm] 30 Minimum thickness [mm] 27.4 Vented + S
MERCEDES-BENZ - A-CLASS Saloon (V177) 09/18→								
Brake Disc								
A 160 d A 180 d	70 85	10/19→ 09/18→	←	for vehicles with AMG Sports Package; for vehicles without sports brake system		**24.0128-0327.1**	**428327**	Ø 305 Brake Disc Thickness [mm] 28 Minimum thickness [mm] 25.4 Vented + S
A 180	100	04/19→	←	for vehicles without AMG sports package; for vehicles without sports brake system; Vehicle Main Current: for vehicles with 48V main current		**24.0128-0327.1**	**428327**	Ø 305 Brake Disc Thickness [mm] 28 Minimum thickness [mm] 25.4 Vented + S
			←	for vehicles with AMG Sports Package; for vehicles without sports brake system		**24.0128-0327.1**	**428327**	Ø 305 Brake Disc Thickness [mm] 28 Minimum thickness [mm] 25.4 Vented + S
A 180 d A 200 A 200 4-matic A 200 d A 200 d 4-matic	85 110 - 120 120 110 110	10/20→ 09/18→ 10/20→ 08/19→ 10/19→	←	for vehicles without sports brake system		**24.0128-0327.1**	**428327**	Ø 305 Brake Disc Thickness [mm] 28 Minimum thickness [mm] 25.4 Vented + S
A 250 A 250 4-matic A 250 e	165 165 160	09/18→ 09/18→ 08/19→	←	for vehicles without AMG sports package; for vehicles without sports brake system		**24.0130-0262.1**	**430262**	Ø 330 Brake Disc Thickness [mm] 30 Minimum thickness [mm] 27.4 Vented + S
MERCEDES-BENZ - B-CLASS Sports Tourer (W247) 12/18→								
Brake Disc								
B 160 B 160 d B 180 B 180 d	80 70 100 85	04/19→ 05/19→ 12/18→ 12/18→	←	for vehicles with AMG Sports Package; for vehicles without sports brake system		**24.0128-0327.1**	**428327**	Ø 305 Brake Disc Thickness [mm] 28 Minimum thickness [mm] 25.4 Vented + S
B 180 d B 200 B 200 4-matic B 200 d B 200 d 4-matic	85 110 - 120 120 110 110	10/20→ 12/18→ 10/20→ 12/18→ 10/19→09/21	←	for vehicles without sports brake system		**24.0128-0327.1**	**428327**	Ø 305 Brake Disc Thickness [mm] 28 Minimum thickness [mm] 25.4 Vented + S
B 250 B 250 4-matic B 250 e	165 165 160	01/19→ 01/19→ 06/20→	←	for vehicles without AMG sports package; for vehicles without sports brake system		**24.0130-0262.1**	**430262**	Ø 330 Brake Disc Thickness [mm] 30 Minimum thickness [mm] 27.4 Vented + S
MERCEDES-BENZ - CITAN Box Body/MPV (W415) 11/12→08/21								
Brake Pad Set, disc brake								
108 CDI 109 CDI 111 CDI 112	55 - 59 66 - 70 81 - 85 84	11/12→08/21 11/12→08/21 06/13→08/21 06/13→08/21	→	Rim Size [in]: 15 / 16		**13.0470-2744.2**	**LD2744**	TRW - WE / - WK + Zub Ceramic
MERCEDES-BENZ - CITAN Mixto (Double Cabin) (W415) 11/12→08/21								
Brake Pad Set, disc brake								
109 CDI 111 CDI	66 81	11/12→08/21 06/13→08/21	→	Rim Size [in]: 15 / 16		**13.0470-2744.2**	**LD2744**	TRW - WE / - WK + Zub Ceramic

© 2023 Continental Aftermarket & Services GmbH

	kW				! #			
MERCEDES-BENZ - CITAN MPV (W415) 11/12→08/21								
Brake Pad Set, disc brake								
108 CDI	55 - 59	11/12→08/21	➡	Rim Size [in]: 15 / 16		**13.0470-2744.2**	**LD2744**	TRW - WE / - WK + Zub Ceramic
109 CDI	66 - 70	11/12→08/21						
111 CDI	81 - 85	06/13→08/21						
112	84	06/13→08/21						
MERCEDES-BENZ - CLA (C118) 03/19→								
Brake Disc								
CLA 180	100	03/19→	⬅	for vehicles without AMG sports package; for vehicles without sports brake system; Vehicle Main Current: for vehicles with 12V main current		**24.0128-0327.1**	**428327**	Ø 305 Brake Disc Thickness [mm] 28 Minimum thickness [mm] 25.4 Vented + S
			⬅	for vehicles with AMG Sports Package; for vehicles without sports brake system		**24.0128-0327.1**	**428327**	Ø 305 Brake Disc Thickness [mm] 28 Minimum thickness [mm] 25.4 Vented + S
CLA 180 d	85	03/19→	⬅	for vehicles with AMG Sports Package; for vehicles without sports brake system		**24.0128-0327.1**	**428327**	Ø 305 Brake Disc Thickness [mm] 28 Minimum thickness [mm] 25.4 Vented + S
CLA 180 d	85	10/20→	⬅	for vehicles without sports brake system		**24.0128-0327.1**	**428327**	Ø 305 Brake Disc Thickness [mm] 28 Minimum thickness [mm] 25.4 Vented + S
CLA 200	110 - 120	03/19→	⬅	for vehicles without AMG sports package; for vehicles without sports brake system		**24.0128-0327.1**	**428327**	Ø 305 Brake Disc Thickness [mm] 28 Minimum thickness [mm] 25.4 Vented + S
CLA 200 4-matic	120	10/20→						
CLA 200 d	110	04/19→						
CLA 200 d 4-matic	110	04/19→						
CLA 250	165	03/19→	⬅	for vehicles without AMG sports package; for vehicles without sports brake system		**24.0130-0262.1**	**430262**	Ø 330 Brake Disc Thickness [mm] 30 Minimum thickness [mm] 27.4 Vented + S
CLA 250 4-matic	165	03/19→						
CLA 250 e	160	06/20→						
MERCEDES-BENZ - CLA Shooting Brake (X118) 06/19→								
Brake Disc								
CLA 180	100	06/19→	⬅	for vehicles without AMG sports package; for vehicles without sports brake system; Vehicle Main Current: for vehicles with 48V main current		**24.0128-0327.1**	**428327**	Ø 305 Brake Disc Thickness [mm] 28 Minimum thickness [mm] 25.4 Vented + S
			⬅	for vehicles with AMG Sports Package; for vehicles without sports brake system		**24.0128-0327.1**	**428327**	Ø 305 Brake Disc Thickness [mm] 28 Minimum thickness [mm] 25.4 Vented + S
CLA 180 d	85	06/19→	⬅	for vehicles without sports brake system		**24.0128-0327.1**	**428327**	Ø 305 Brake Disc Thickness [mm] 28 Minimum thickness [mm] 25.4 Vented + S
CLA 200	110 - 120	06/19→	⬅	for vehicles without AMG sports package; for vehicles without sports brake system		**24.0128-0327.1**	**428327**	Ø 305 Brake Disc Thickness [mm] 28 Minimum thickness [mm] 25.4 Vented + S
CLA 200 d	110	06/19→						
CLA 200 d 4-matic	110	10/19→						
CLA 250	165	06/19→	⬅	for vehicles without AMG sports package; for vehicles without sports brake system		**24.0130-0262.1**	**430262**	Ø 330 Brake Disc Thickness [mm] 30 Minimum thickness [mm] 27.4 Vented + S
CLA 250 4-matic	165	06/19→						
CLA 250 e	160	06/20→						
MERCEDES-BENZ - CLS (C218) 01/11→12/17								
Brake Pad Set, disc brake								
CLS 350	225	01/11→08/14	⬅	for vehicles with sports package / for vehicles with AMG Sports Package		**13.0470-4863.2**	**LD4863**	BRE + WE / - WK Ceramic
CLS 350 BlueTEC / d	185 - 190	02/13→12/17						
CLS 350 BlueTEC / d 4-matic	185	02/13→12/17						
CLS 350 CDI / d	195	01/11→08/14						
CLS 350 CDI / d 4-matic	195	09/11→08/14						
CLS 350 d 4-matic	190	04/15→12/17						
MERCEDES-BENZ - CLS Shooting Brake (X218) 10/12→12/17								
Brake Pad Set, disc brake								
CLS 350 BlueTEC / d	185 - 190	05/14→12/17	⬅	for vehicles with sports package		**13.0470-4863.2**	**LD4863**	BRE + WE / - WK Ceramic
CLS 350 BlueTEC / d 4-matic	185	05/14→12/17						
CLS 350 CDI / d	195	10/12→08/14						
CLS 350 CDI / d 4-matic	195	10/12→08/14						
CLS 350 d 4-matic	190	04/15→12/17						

	kW				! #			
MERCEDES-BENZ - E-CLASS (W212) 01/09→12/16								
Brake Pad Set, disc brake								
E 350 BlueTEC E 350 BlueTEC 4-matic E 350 CDI	185 - 190 185 - 190 195	01/13→12/15 01/13→12/15 03/11→12/15		for vehicles with sports package / for vehicles with AMG Sports Package		**13.0470-4863.2**	**LD4863**	BRE + WE / - WK Ceramic
MERCEDES-BENZ - E-CLASS T-Model (S212) 08/09→12/16								
Brake Pad Set, disc brake								
E 350 BlueTEC E 350 BlueTEC 4-matic	185 - 190 185 - 190	11/12→12/16 11/12→12/16		for vehicles with sports package / for vehicles with AMG Sports Package		**13.0470-4863.2**	**LD4863**	BRE + WE / - WK Ceramic
E 350 CDI E 350 CDI 4-matic	195 195	07/11→12/13 07/11→12/13		for vehicles with AMG Sports Package / for vehicles with sports package		**13.0470-4863.2**	**LD4863**	BRE + WE / - WK Ceramic
MERCEDES-BENZ - EQA (H243) 02/21→								
Brake Disc								
EQA 250 EQA 250+ EQA 300 4-matic EQA 350 4-matic	140 140 168 215	02/21→ 03/22→ 05/21→ 05/21→				**24.0130-0262.1**	**430262**	Ø 330 Brake Disc Thickness [mm] 30 Minimum thickness [mm] 27.4 Vented + S
MERCEDES-BENZ - EQB (X243) 09/21→								
Brake Disc								
EQB 250 EQB 300 4-matic EQB 350 4-matic	140 168 215	02/22→ 12/21→ 12/21→				**24.0130-0262.1**	**430262**	Ø 330 Brake Disc Thickness [mm] 30 Minimum thickness [mm] 27.4 Vented + S
MERCEDES-BENZ - GLA (H247) 02/20→								
Brake Disc								
GLA 180	100	07/20→		for vehicles without AMG sports package; for vehicles without sports brake system; Vehicle Main Current: for vehicles with 12V main current		**24.0128-0327.1**	**428327**	Ø 305 Brake Disc Thickness [mm] 28 Minimum thickness [mm] 25.4 Vented + S
GLA 220 d GLA 220 d 4-matic GLA 250 GLA 250 4-matic GLA 250 e	140 140 165 165 160	02/20→ 02/20→ 02/20→ 02/20→ 06/20→		for vehicles without AMG sports package; for vehicles without sports brake system		**24.0130-0262.1**	**430262**	Ø 330 Brake Disc Thickness [mm] 30 Minimum thickness [mm] 27.4 Vented + S
MERCEDES-BENZ - GLB (X247) 07/19→								
Brake Disc								
GLB 180 d	85	08/19→		for vehicles without sports brake system; for vehicles with 3rd seating row		**24.0130-0262.1**	**430262**	Ø 330 Brake Disc Thickness [mm] 30 Minimum thickness [mm] 27.4 Vented + S
GLB 200 d GLB 200 d 4-matic GLB 220 d GLB 220 d 4-matic GLB 250 GLB 250 4-matic	110 110 140 140 165 165	08/19→ 08/19→ 12/19→ 08/19→ 12/19→ 08/19→		for vehicles without AMG sports package; for vehicles without sports brake system		**24.0130-0262.1**	**430262**	Ø 330 Brake Disc Thickness [mm] 30 Minimum thickness [mm] 27.4 Vented + S
MERCEDES-BENZ - GLE (V167) 10/18→								
Brake Pad Set, disc brake								
GLE 300 d 4-matic GLE 350 d 4-matic	180 200	10/18→05/21 12/18→05/21		for vehicles without AMG sports package; not for vehicles with reinforced brakes / for vehicles without sports brake system		**13.0460-2641.2** **13.0470-2641.2**	**602641** **LD2641**	TRW + WE / - WK + Zub TRW + WE / - WK + Zub Ceramic
RENAULT - KANGOO / GRAND KANGOO II (KW0/1_) 02/08→								
Brake Pad Set, disc brake								
1.2 TCe 115 1.5 dCi 1.5 dCi 105 1.5 dCi 110 1.5 dCi 70 1.5 dCi 75 1.5 dCi 85 1.5 dCi 90 1.6 1.6 16V 1.6 16V FLEX	84 78 76 80 - 81 50 55 63 66 64 78 78	07/13→ 02/08→ 02/08→ 09/10→ 02/08→ 11/12→ 02/08→ 06/08→ 02/08→ 02/08→ 02/08→				**13.0470-2744.2**	**LD2744**	TRW - WE / - WK + Zub Ceramic
→								

© 2023 Continental Aftermarket & Services GmbH

	kW				! #			
RENAULT - KANGOO / GRAND KANGOO II (KW0/1_) 02/08→								
Brake Pad Set, disc brake								
1.5 dCi 115 1.5 dCi 80 1.5 dCi 90 1.5 dCi 95 1.6 16V LPG	85 59 67 70 78	03/19→ 03/19→ 08/17→ 03/19→ 12/08→		Rim Size [in]: 15 / 16		**13.0470-2744.2**	**LD2744**	TRW - WE / - WK + Zub Ceramic
RENAULT - KANGOO BE BOP (KW0/1_) 02/09→								
Brake Pad Set, disc brake								
1.5 dCi 1.5 dCi 75 1.6	66 - 80 55 78	02/09→ 09/10→ 02/09→12/12		→ 12/10; Rim Size [in]: 16		**13.0470-2744.2**	**LD2744**	TRW - WE / - WK + Zub Ceramic
RENAULT - KANGOO Express (FC0/1_) 08/97→								
Brake Pad Set, disc brake								
1.5 dCi	50	06/05→				**13.0470-2744.2**	**LD2744**	TRW - WE / - WK + Zub Ceramic
RENAULT - KANGOO Express (FW0/1_) 02/08→								
Brake Pad Set, disc brake								
1.2 TCe 115 1.5 dCi 105 1.5 dCi 110 1.5 dCi 115 1.5 dCi 70 1.5 dCi 75 1.5 dCi 80 1.5 dCi 85 1.5 dCi 90 1.5 dCi 95 1.6 1.6 16V 1.6 16V FLEX 1.6 16V LPG Z.E.	84 76 80 - 81 85 50 55 59 63 66 - 67 70 64 78 78 78 44	07/13→ 02/08→ 09/10→ 10/19→ 02/08→ 09/10→ 10/19→ 02/08→ 06/09→ 10/19→ 02/08→ 02/08→ 02/08→ 02/08→ 10/11→		Rim Size [in]: 15 / 16		**13.0470-2744.2**	**LD2744**	TRW - WE / - WK + Zub Ceramic
RENAULT - LOGAN II Estate (K8_) 11/13→								
Brake Pad Set, disc brake								
1.6	78	12/13→		Equipment Code: SAN713 / ENPC01 / ENPD01		**13.0460-7358.2**	**607358**	ATE - WE / - WK
RENAULT - SANDERO/STEPWAY II (B8_) 11/13→								
Brake Pad Set, disc brake								
TCe 90	66	09/15→		Equipment Code: SAN713 / VSUVE / ENPD01		**13.0460-7358.2**	**607358**	ATE - WE / - WK
SEAT - LEON (5F1) 09/12→05/21								
Cable Pull, parking brake								
1.0 TSi 1.0 TSI 1.2 TSI 1.4 TSI 1.5 TGi 1.5 TSI 1.6 TDI 1.8 TSI 2.0 Cupra 2.0 Cupra R 2.0 TDI 2.0 TSI	63 85 63 - 81 90 - 110 96 96 - 110 66 - 81 132 195 - 221 228 81 - 135 140	09/18→08/20 05/15→08/20 12/12→08/20 09/12→08/20 10/18→08/20 09/18→08/20 09/12→08/20 02/13→08/18 10/13→08/20 11/17→08/18 09/12→08/20 09/18→08/20		+PR 0N1 / 0B2; Disc Brake; ⬇	1	**24.3727-3410.2**	**583410**	L= 1,638
				+PR 0N1 / 0B1; Disc Brake; ⬇	1	**24.3727-3411.2**	**583411**	L= 1,717
1.4 TGI	81	02/13→08/18		10/13→; +PR 0N1 / 0B2; Disc Brake; ⬇	1	**24.3727-3410.2**	**583410**	L= 1,638
				10/13→; +PR 0N1 / 0B1; Disc Brake; ⬇	1	**24.3727-3411.2**	**583411**	L= 1,717
1.6 TDI	85	11/16→08/20		01/17→; +PR 0N1 / 0B2; Disc Brake; ⬇	1	**24.3727-3410.2**	**583410**	L= 1,638
				01/17→; +PR 0N1 / 0B1; Disc Brake; ⬇	1	**24.3727-3411.2**	**583411**	L= 1,717

	kW				! #			
SEAT - LEON Hatchback Van (5F1) 09/12→08/20								
Cable Pull, parking brake								
1.0 TSI	85	05/15→08/20		+PR 0N1 / 0B2; Disc Brake;	1	**24.3727-3410.2**	**583410**	L= 1,638
1.2 TSI 1.4 TSI	81 90 - 110	04/14→08/18 09/12→08/20		+PR 0N1 / 0B1; Disc Brake;	1	**24.3727-3411.2**	**583411**	L= 1,717
1.6 TDI	66 - 81	09/12→10/16						
1.8 TFSI	132	02/13→08/18						
2.0 Cupra	213 - 221	09/15→08/18						
2.0 TDI	110 - 135	10/12→08/18						
1.2 TSI	63	01/13→08/18		04/14→; +PR 0N1 / 0B2; Disc Brake;	1	**24.3727-3410.2**	**583410**	L= 1,638
				04/14→; +PR 0N1 / 0B1; Disc Brake;	1	**24.3727-3411.2**	**583411**	L= 1,717
1.6 TDI	85	11/16→08/20		01/17→; +PR 0N1 / 0B2; Disc Brake;	1	**24.3727-3410.2**	**583410**	L= 1,638
				01/17→; +PR 0N1 / 0B1; Disc Brake;	1	**24.3727-3411.2**	**583411**	L= 1,717
SEAT - LEON SC (5F5) 01/13→12/18								
Cable Pull, parking brake								
1.0 TSI	85	05/15→08/18		+PR 0N1 / 0B2; Disc Brake;	1	**24.3727-3410.2**	**583410**	L= 1,638
1.2 TSI	63 - 81	01/13→08/18		+PR 0N1 / 0B1; Disc Brake;	1	**24.3727-3411.2**	**583411**	L= 1,717
1.4 TSI	90 - 110	02/13→08/18						
1.6 TDI	66 - 81	02/13→08/18						
1.8 TSI	132	02/13→08/18						
2.0 Cupra	195 - 221	10/13→08/18						
2.0 TDI	81 - 135	02/13→08/18						
1.6 TDI	85	11/16→08/18		01/17→; +PR 0N1 / 0B2; Disc Brake;	1	**24.3727-3410.2**	**583410**	L= 1,638
				01/17→; +PR 0N1 / 0B1; Disc Brake;	1	**24.3727-3411.2**	**583411**	L= 1,717
SEAT - LEON ST (5F8) 09/12→08/20								
Cable Pull, parking brake								
1.0 TSi	63	09/18→08/20		+PR 0N1 / 0B2; Disc Brake;	1	**24.3727-3410.2**	**583410**	L= 1,638
1.0 TSI	85	05/15→08/20		+PR 0N1 / 0B1; Disc Brake;	1	**24.3727-3411.2**	**583411**	L= 1,717
1.2 TSI	63 - 81	08/13→08/20						
1.4 TGI	81	10/13→08/18						
1.4 TSI	90 - 110	09/12→08/20						
1.5 TGi	96	10/18→08/20						
1.5 TSI	96 - 110	09/18→08/20						
1.6 TDI	66 - 81	09/13→08/20						
1.6 TDI 4Drive	77 - 85	04/14→08/20						
1.8 TSI	132	10/13→08/18						
1.8 TSI 4Drive	132	11/14→08/18						
2.0 Cupra	195 - 221	10/13→08/20						
2.0 Cupra 4Drive	221	11/16→08/20						
2.0 TDI	81 - 135	02/13→08/20						
2.0 TDI 4Drive	110 - 135	04/14→08/18						
2.0 TSI	140	07/18→08/20						
2.0 TSI 4Drive	140	09/18→08/20						
1.6 TDI	85	11/16→08/20		01/17→; +PR 0N1 / 0B2; Disc Brake;	1	**24.3727-3410.2**	**583410**	L= 1,638
				01/17→; +PR 0N1 / 0B1; Disc Brake;	1	**24.3727-3411.2**	**583411**	L= 1,717
SEAT - LEON ST Estate Van (5F8) 01/13→08/20								
Cable Pull, parking brake								
1.0 TSI	85	05/15→08/20		+PR 0N1 / 0B2; Disc Brake;	1	**24.3727-3410.2**	**583410**	L= 1,638
1.2 TSI	63 - 81	01/13→08/18		+PR 0N1 / 0B1; Disc Brake;	1	**24.3727-3411.2**	**583411**	L= 1,717
1.4 TSI	110	05/14→08/20						
1.6 TDI	81	09/13→08/20						
1.8 TFSI	132	10/13→08/18						
2.0 Cupra	206 - 221	10/13→08/20						
2.0 Cupra 4Drive	221	11/16→08/18						
2.0 TDI	110 - 135	04/13→08/18						
2.0 TDI 4Drive	110	09/14→08/18						
→								

© 2023 Continental Aftermarket & Services GmbH

	kW				! #			
SEAT - LEON ST Estate Van (5F8) 01/13→08/20								
Cable Pull, parking brake								
1.6 TDI	85	11/16→08/20		01/17→; +PR 0N1 / 0B2; Disc Brake;	1	**24.3727-3410.2**	**583410**	L= 1,638
				01/17→; +PR 0N1 / 0B1; Disc Brake;	1	**24.3727-3411.2**	**583411**	L= 1,717
2.0 TDI 4Drive	135	10/14→08/18		11/14→; +PR 0N1 / 0B2; Disc Brake;	1	**24.3727-3410.2**	**583410**	L= 1,638
				11/14→; +PR 0N1 / 0B1; Disc Brake;	1	**24.3727-3411.2**	**583411**	L= 1,717
SKODA - OCTAVIA III (5E3, NL3, NR3) 11/12→03/21								
Cable Pull, parking brake								
1.0 TSI	85	05/16→10/20		+PR 0N4; Disc Brake;	1	**24.3727-3412.2**	**583412**	L= 1,717
1.2 TSI	81	05/15→02/17						
1.4 TSI	103	11/12→02/17						
1.4 TSI G-TEC	81	11/13→02/17						
1.5 TSI	110	02/17→10/20						
1.6	81	01/14→10/20						
1.6 TDI	81 - 85	05/13→10/20						
1.6 TDI 4x4	77 - 85	05/13→10/20						
1.8 TSI	132	11/12→10/20						
1.8 TSI 4x4	132	05/14→10/20						
2.0 TDI	105	11/12→02/17						
2.0 TDI 4x4	110	05/13→10/20						
2.0 TDI RS	135	05/13→10/20						
2.0 TSI	140	02/17→10/20						
2.0 TSI 4x4	140	02/19→10/20						
2.0 TSI RS	162 - 180	05/13→10/20						
1.2 TSI	63 - 77	11/12→02/17		02/13→; +PR 0N4; Disc Brake;	1	**24.3727-3412.2**	**583412**	L= 1,717
1.6 TDI	66 - 77	11/12→10/20						
2.0 TDI	110	11/12→10/20						
1.4 TSI	110	08/14→10/20		05/15→; +PR 0N4; Disc Brake;	1	**24.3727-3412.2**	**583412**	L= 1,717
2.0 TDI / TDI RS 4x4	135	05/13→10/20		09/14→; +PR 0N4; Disc Brake;	1	**24.3727-3412.2**	**583412**	L= 1,717
SKODA - OCTAVIA III Combi (5E5, 5E6) 11/12→10/20								
Cable Pull, parking brake								
1.0 TSI	85	05/16→10/20		+PR 0N4; Disc Brake;	1	**24.3727-3412.2**	**583412**	L= 1,717
1.2 TSI	81	05/15→02/17						
1.4 TSI	103	11/12→02/17						
1.4 TSI G-TEC	81	11/12→02/17						
1.5 TSI	110	02/17→10/20						
1.5 TSI G-TEC	96	01/19→10/20						
1.6	81	01/14→02/17						
1.6 TDI	81 - 85	05/13→10/20						
1.6 TDI 4x4	77 - 85	11/12→10/20						
1.8 TSI	132	11/12→10/20						
1.8 TSI 4x4	132	11/12→02/17						
2.0 TDI	105	11/12→02/17						
2.0 TDI / TDI RS 4x4	135	05/13→10/20						
2.0 TDI 4x4	110	11/12→10/20						
2.0 TDI RS	135	05/13→10/20						
2.0 TSI	140	02/17→10/20						
2.0 TSI 4x4	140	02/19→10/20						
2.0 TSI RS	169 - 180	05/15→10/20						
1.2 TSI	63 - 77	11/12→02/17		02/13→; +PR 0N4; Disc Brake;	1	**24.3727-3412.2**	**583412**	L= 1,717
1.6 TDI	66 - 77	11/12→10/20						
2.0 TDI	110	11/12→10/20						
1.4 TSI	110	08/14→10/20		05/15→; +PR 0N4; Disc Brake;	1	**24.3727-3412.2**	**583412**	L= 1,717
2.0 TSI RS	162	11/12→02/17		05/13→; +PR 0N4; Disc Brake;	1	**24.3727-3412.2**	**583412**	L= 1,717
TOYOTA - YARIS (_P13_) 12/10→								
Brake Hose								
1.0	53	06/18→				**24.5265-0504.3**	**331635**	L= 530
1.5	82	03/17→						
1.5 Hybrid	54 - 55	03/12→						
1.8 GRMN	156	09/17→						

	kW				! #			
TOYOTA - YARIS Hatchback Van (_P13_) 10/12→								
Brake Hose								
1.0 VVTi	53	06/18→				**24.5265-0504.3**	**331635**	L= 530
1.4 D4d	66	07/14→						
1.5 Hybrid	55	04/15→						
1.5 VVTi	82	03/17→						
VOLVO - XC40 (536) 10/17→								
Brake Pad Set, disc brake								
B4 Mild-Hybrid	145	09/19→		Brake Size: 17"		**13.0470-5520.2**	**LD5520**	- WE / without acoustic wear warning + Zub Ceramic
B4 Mild-Hybrid AWD	145	09/19→						
B5 Mild-Hybrid AWD	183 - 184	09/19→						
D3	110	09/18→09/21						
D3 AWD	110	09/18→09/21						
D4 AWD	140	10/17→09/21						
D4 Polestar AWD	147	01/19→09/21						
T2	95	06/19→						
T3	110 - 120	03/18→						
T4	140	09/18→						
T4 AWD	140	09/18→						
T4 Plug-in Hybrid	95	06/20→						
T5 AWD	182 - 184	10/17→						
T5 Plug-in Hybrid	132	06/19→						
T5 Plug-in Hybrid Polestar Performance	143	06/19→						
T5 Polestar AWD	183	10/17→09/19						
VW - CALIFORNIA T5 Camper (7EC, 7EF, 7EG, 7HF) 04/03→08/15								
Cable Pull, parking brake								
1.9 TDI	63 - 77	05/07→11/09		7H-7-000001→; +PR 0WR;	2	**24.3727-3413.2**	**583413**	L= 1,223
2.0 TDI	62 - 132	09/09→08/15						
2.0 TDI 4motion	100 - 132	10/09→08/15						
2.5 TDi	120	05/07→11/09						
2.5 TDI	96 - 128	05/07→11/09						
2.5 TDI 4motion	96 - 128	05/07→11/09						
VW - MULTIVAN V (7HM, 7HN, 7HF, 7EF, 7EM, 7EN) 04/03→08/15								
Cable Pull, parking brake								
1.9 TDI	62 - 77	04/03→11/09		7H-7-000001→; +PR 0WR;	2	**24.3727-3413.2**	**583413**	L= 1,223
2.0	85	11/03→08/15						
2.0 BiTDI	132	09/09→08/15						
2.0 BiTDI 4motion	132	09/09→08/15						
2.0 TDI	62 - 103	09/09→08/15						
2.0 TDI 4motion	100 - 103	09/09→08/15						
2.5 TDI	96 - 128	04/03→11/09						
2.5 TDI 4motion	96 - 128	07/04→11/09						
VR6 3.2	170 - 173	02/04→12/09						
VR6 3.2 4motion	173	07/04→12/09						
VW - TRANSPORTER V Bus (7HB, 7HJ, 7EB, 7EJ) 04/03→08/15								
Cable Pull, parking brake								
1.9 TDI	62 - 77	04/03→11/09		7H-7-000001→; +PR 0WR;	2	**24.3727-3413.2**	**583413**	L= 1,223
2.0	85	11/03→08/15						
2.0 BiTDI	132	09/09→08/15						
2.0 BiTDI 4motion	132	09/09→08/15						
2.0 CNG	85	01/06→08/15						
2.0 TDI	62 - 103	09/09→08/15						
2.0 TDI 4motion	100 - 103	09/09→08/15						
2.5 TDi	120	11/03→11/09						
2.5 TDI	96 - 128	04/03→11/09						
2.5 TDI 4motion	96 - 128	07/04→11/09						
3.2 V6 4motion	173	11/03→12/09						

→

© 2023 Continental Aftermarket & Services GmbH

	kW				! #			
VW - TRANSPORTER V Bus (7HB, 7HJ, 7EB, 7EJ) 04/03→08/15								
Cable Pull, parking brake								
VR6 3.2	170 - 173	02/04→11/09		7H-7-000001→; +PR 0WR;	2	**24.3727-3413.2**	**583413**	L= 1,223
VR6 3.2 4motion	170	11/03→11/09						
VW - TRANSPORTER V Platform/Chassis (7JD, 7JE, 7JL, 7JY, 7JZ, 7FD 04/03→08/15								
Cable Pull, parking brake								
1.9 TDI	62 - 77	04/03→11/09		7J-7-000001→; +PR 0WR / 0E0 / 0E9;	2	**24.3727-3413.2**	**583413**	L= 1,223
2.0	85	11/03→05/13						
2.0 CNG	85	11/03→05/11						
2.5 TDI	96 - 128	04/03→11/09						
VR6 3.2	170 - 173	08/03→11/09						
2.0 BiTDI	132	09/09→08/15		+PR 0WR / 0E0 / 0E9;	2	**24.3727-3413.2**	**583413**	L= 1,223
2.0 TDI	62 - 103	09/09→08/15						
VR6 3.2 4motion	170	11/03→11/09		7H-7-000001→; +PR 0WR;	2	**24.3727-3413.2**	**583413**	L= 1,223
VW - TRANSPORTER V Van (7HA, 7HH, 7EA, 7EH) 04/03→								
Cable Pull, parking brake								
1.9 TDI	62 - 77	04/03→11/09		7H-7-000001→; +PR 0WR;	2	**24.3727-3413.2**	**583413**	L= 1,223
2.0	85	11/03→08/15						
2.0 BiFuel	85	05/11→08/15						
2.0 BiTDI	132	09/09→08/15						
2.0 BiTDI 4motion	132	09/09→08/15						
2.0 TDI	62 - 103	09/09→08/15						
2.0 TDI 4motion	100 - 103	09/09→08/15						
2.5 TDI	96 - 128	04/03→11/09						
2.5 TDI 4motion	96 - 128	07/04→11/09						
VR6 3.2	170 - 173	04/03→11/09						
VR6 3.2 4motion	170 - 173	04/03→11/09						

© 2023 Continental Aftermarket & Services GmbH

EN Technical translations

DE Technische Übersetzungen

ES Traducciones tecnicas

FR Traductions techniques

IT Traduzioni tecniche

© 2023 Continental Aftermarket & Services GmbH

Technical translations

Technische Übersetzungen - Traducciones tecnicas - Traductions techniques - Traduzioni tecniche

EN	
	Brake Hose
	Cable Pull, parking brake
	Brake Caliper
	Brake Pad Set, disc brake
	Brake Disc
	Rear
	Rear Axle Left
	Rear Axle Right
	Front Axle Right
+PR	for PR number
+ S	with bolts/screws
+ UK	Great Britain
+ WE	prepared for wear indicator
+ WK	with acoustic wear warning
+ Zub	with accessories
17"	17"
230 V	230 V
3	3
50 - 60 Hz	50 - 60 Hz
Abfrage Produktbild vorhanden	Abfrage Produktbild vorhanden
AKE	Brake System, Akebono
Article number of recom-mended accessories	Article number of recommended acces-sories
ATE Ceramic	additional article information, ATE Ceramic
B	Coated

EN	
Bolt Hole Circle Ø [mm]	Bolt Hole Circle Ø [mm]
Bore Ø [mm]	Bore Ø [mm]
BOS	Brake System, Bosch
Brake Disc Thickness [mm]	Brake Disc Thickness [mm]
Brake Size	Brake Size
BRE	Brake System, Brembo
CB compat-ible package	CB compatible package
Centering Diameter [mm]	Centering Diameter [mm]
Code	Code
Content [litre]	Content [litre]
Country specific package and status data	Country specific package and status data
Disc Brake	Disc Brake
Electric-pneumatic	Electric-pneumatic
Equipment Code	Equipment Code
Filling hose length [m]	Filling hose length [m]
Flange Hole Diameter [mm]	Flange Hole Diameter [mm]
for single tyres	for single tyres
for vehicles with 12V main current	for vehicles with 12V main current
for vehicles with 3rd seating row	for vehicles with 3rd seating row
for vehicles with 48V main current	for vehicles with 48V main current

© 2023 Continental Aftermarket & Services GmbH

Technical translations

Technische Übersetzungen - Traducciones tecnicas - Traductions techniques - Traduzioni tecniche

EN	
for vehicles with AMG Sports Package	for vehicles with AMG Sports Package
for vehicles without AMG sports package	for vehicles without AMG sports package
for vehicles without sports brake system	for vehicles without sports brake system
for vehicles with sports package	for vehicles with sports package
HC	High-carbon
Height [mm]	Height [mm]
Height 1 [mm]	Height 1 [mm]
Height 2 [mm]	Height 2 [mm]
L=	Length [mm]
Machining	Machining
MAN	Brake System, Mando
Minimum thickness [mm]	Minimum thickness [mm]
not for trim level	not for trim level
not for vehicles with reinforced brakes	not for vehicles with reinforced brakes
Number of Holes	Number of Holes
Observe dimensions	Observe dimensions
Piston Diameter [mm]	Piston Diameter [mm]
Produkttyp vorhanden	Produkttyp vorhanden
Reached Quality Gates	Reached Quality Gates
replacement part	replacement part
Rim Size [in]	Rim Size [in]

EN	
Service exchange part	Service exchange part
Surface	Surface
Thickness [mm]	Thickness [mm]
Thickness 1 [mm]	Thickness 1 [mm]
Thickness 2 [mm]	Thickness 2 [mm]
TRW	Brake System, Lucas / TRW
usage number	usage number
Vehicle Main Current	Vehicle Main Current
- WE	not prepared for wear indicator
Width [mm]	Width [mm]
with anti-squeak plate	with anti-squeak plate
with brake caliper screws	with brake caliper screws
without acoustic wear warning	without acoustic wear warning
without hollow screw	without hollow screw
- WK	excl. wear warning contact
Yes	Yes
Ø	Inner diameter [mm] Outer diameter [mm]
→	Construction year from Vehicle Identification Number from
→	Construction year to
→ to holder size [l]	to holder size [l]

© 2023 Continental Aftermarket & Services GmbH

Technical translations

Technische Übersetzungen - Traducciones tecnicas - Traductions techniques - Traduzioni tecniche

DE	
	Bremsschlauch
	Seilzug, Feststellbremse
	Bremssattel
	Bremsbelagsatz, Scheibenbremse
	Bremsscheibe
	hinten
	Hinterachse links
	Hinterachse rechts
	Vorderachse rechts
+PR	für PR-Nummer
+ S	mit Schrauben
+ UK	Groß Britannien
+ WE	für Verschleißwarnanzeiger vorbereitet
+ WK	mit akustischer Verschleißwarnung
+ Zub	mit Zubehör
17"	17"
230 V	230 V
3	3
50 - 60 Hz	50 - 60 Hz
Abfrage Produktbild vorhanden	Abfrage Produktbild vorhanden
AKE	Bremssystem, Akebono
Article number of recom-mended accessories	Artikelnummer des empfohlenen Zube-hörs
ATE Ceramic	Artikelzusatzbezeichnung, ATE Ceramic
B	beschichtet
Bolt Hole Circle Ø [mm]	Lochkreis-Ø [mm]

DE	
Bore Ø [mm]	Bohrung-Ø [mm]
BOS	Bremssystem, Bosch
Brake Disc Thickness [mm]	Bremsscheibendicke [mm]
Brake Size	Bremsengröße
BRE	Bremssystem, Brembo
CB compat-ible package	SB gerechte Verpackung
Centering Diameter [mm]	Zentrierungsdurchmesser [mm]
Code	Baumuster
Content [litre]	Inhalt [Liter]
Country specific package and status data	Länderspezifische Verpackungs- und Status-Informationen
Disc Brake	Scheibenbremse
Electric-pneumatic	elektrisch-pneumatisch
Equipment Code	Ausstattungs-Code
Filling hose length [m]	Füllschlauchlänge [m]
Flange Hole Diameter [mm]	Flanschlochdurchmesser [mm]
for single tyres	für Einfachbereifung
for vehicles with 12V main current	für Fahrzeuge mit 12V Bordnetz
for vehicles with 3rd seating row	für Fahrzeuge mit 3. Sitzreihe
for vehicles with 48V main current	für Fahrzeuge mit 48V Bordnetz
for vehicles with AMG Sports Package	für Fahrzeuge mit AMG-Sportpaket

© 2023 Continental Aftermarket & Services GmbH

Technical translations

Technische Übersetzungen - Traducciones tecnicas - Traductions techniques - Traduzioni tecniche

DE	
for vehicles without AMG sports package	für Fahrzeuge ohne AMG-Sportpaket
for vehicles without sports brake system	für Fahrzeuge ohne Sportbremsanlage
for vehicles with sports package	für Fahrzeuge mit Sportpaket
HC	hochgekohlt
Height [mm]	Höhe [mm]
Height 1 [mm]	Höhe 1 [mm]
Height 2 [mm]	Höhe 2 [mm]
L=	Länge [mm]
Machining	Bearbeitung
MAN	Bremssystem, Mando
Minimum thickness [mm]	Mindestdicke [mm]
not for trim level	nicht für Ausstattungsvariante
not for vehicles with reinforced brakes	nicht für Fahrzeuge mit verstärkter Bremse
Number of Holes	Lochanzahl
Observe dimensions	Abmessungen beachten
Piston Diameter [mm]	Kolbendurchmesser [mm]
Produkttyp vorhanden	Produkttyp vorhanden
Reached Quality Gates	Erfüllte Qualitätsstufen
replacement part	Austauschteil
Rim Size [in]	Felgengröße [Zoll]
Service exchange part	Austauschteil
Surface	Oberfläche

DE	
Thickness [mm]	Dicke/Stärke [mm]
Thickness 1 [mm]	Dicke/Stärke 1 [mm]
Thickness 2 [mm]	Dicke/Stärke 2 [mm]
TRW	Bremssystem, Lucas / TRW
usage number	Gebrauchsnummer
Vehicle Main Current	Bordnetzausführung
- WE	nicht für Verschleißwarnanzeiger vorbereitet
Width [mm]	Breite [mm]
with anti-squeak plate	mit Anti-Quietsch-Blech
with brake caliper screws	mit Bremssattelschrauben
without acoustic wear warning	ohne akustische Verschleißwarnung
without hollow screw	ohne Hohlschraube
- WK	exkl. Verschleißwarnkontakt
Yes	Ja
Ø	Innendurchmesser [mm] Außendurchmesser [mm]
→	Baujahr ab Fahrgestellnummer ab
→	Baujahr bis
→ to holder size [l]	bis Gebindegröße [l]

© 2023 Continental Aftermarket & Services GmbH

Technical translations

Technische Übersetzungen - Traducciones tecnicas - Traductions techniques - Traduzioni tecniche

ES	
	Tubo flexible de frenos
	Cable de accionamiento, freno de estacionamiento
	Pinza de freno
	Juego de pastillas de freno
	Disco de freno
	posterior
	Eje trasero izquierda
	Eje trasero, derecha
	Eje delantero, derecha
+PR	Número de PR
+ S	con tornillos
+ UK	Gran Bretaña
+ WE	preparado para indicador desgaste
+ WK	con avisador acústico de desgaste
+ Zub	con accesorios
17"	17"
230 V	230 V
3	3
50 - 60 Hz	50 - 60 Hz
Abfrage Produktbild vorhanden	Abfrage Produktbild vorhanden
AKE	Sistema de frenos, Akebono
Article number of recom-mended accessories	Nº art. de accesorio recomendado
ATE Ceramic	Denominación adicional del artículo, ATE Ceramic
B	revestido

ES	
Bolt Hole Circle Ø [mm]	corona de agujeros - Ø [mm]
Bore Ø [mm]	Taladro Ø [mm]
BOS	Sistema de frenos, Bosch
Brake Disc Thickness [mm]	Espesor de disco de frenos [mm]
Brake Size	Tamaño freno
BRE	Sistema de frenos, Brembo
CB compat-ible package	Embalaje apto para autoservicio
Centering Diameter [mm]	Diámetro de centrado [mm]
Code	Tipo
Content [litre]	Capacidad [litros]
Country specific package and status data	Información específica del país sobre el embalaje y sobre el estado
Disc Brake	Discos
Electric-pneumatic	electroneumático
Equipment Code	Código de equipamiento
Filling hose length [m]	Long. manguera llenado [m]
Flange Hole Diameter [mm]	Diám. taladro brida [mm]
for single tyres	para neumáticos sencillos
for vehicles with 12V main current	para vehículos con red de a bordo 12V
for vehicles with 3rd seating row	para vehículos con 3 hileras de asientos
for vehicles with 48V main current	para vehículos con red de a bordo 48V

© 2023 Continental Aftermarket & Services GmbH

Technical translations

Technische Übersetzungen - Traducciones tecnicas - Traductions techniques - Traduzioni tecniche

ES	
for vehicles with AMG Sports Package	para vehículos con paquete sport AMG
for vehicles without AMG sports package	para vehículos sin paquete deportivo AMG
for vehicles without sports brake system	para vehículos sin sistema de frenos deportivos
for vehicles with sports package	para vehículos con paquete sport
HC	altamente carbonizado
Height [mm]	Altura [mm]
Height 1 [mm]	Altura 1 [mm]
Height 2 [mm]	Altura 2 [mm]
L=	Longitud [mm]
Machining	Procesamiento
MAN	Sistema de frenos, Mando
Minimum thickness [mm]	Espesor mínimo [mm]
not for trim level	no para variante de equipamiento
not for vehicles with reinforced brakes	no para vehículos con frenos reforzados
Number of Holes	Número de orificios
Observe dimensions	Observar dimensiones
Piston Diameter [mm]	Diámetro del pistón [mm]
Produkttyp vorhanden	Produkttyp vorhanden
Reached Quality Gates	Reached Quality Gates
replacement part	Recambio
Rim Size [in]	Tamaño de llanta [in]

ES	
Service exchange part	Pieza de intercambio
Surface	Superficie
Thickness [mm]	Espesor [mm]
Thickness 1 [mm]	Espesor/grosor 1 [mm]
Thickness 2 [mm]	Espesor/grosor 2 [mm]
TRW	Sistema de frenos, Lucas / TRW
usage number	Número de uso
Vehicle Main Current	Modelo red de a bordo
- WE	no preparado para indicador de desgaste
Width [mm]	Ancho [mm]
with anti-squeak plate	Chapa antichirridos
with brake caliper screws	con tornillos pinza freno
without acoustic wear warning	sin aviso acústico de desgaste
without hollow screw	sin tornillo hueco
- WK	excl. contacto de avisador de desgaste
Yes	sí
Ø	Diámetro interior [mm] Diámetro exterior [mm]
→	año construcción desde nº de chasis desde
→	año construcción hasta
→ to holder size [l]	hasta tamaño de recipiente [l]

© 2023 Continental Aftermarket & Services GmbH

Technical translations

Technische Übersetzungen - Traducciones tecnicas - Traductions techniques - Traduzioni tecniche

FR	
	Flexible de frein
	Tirette à câble, frein de stationnement
	Étrier de frein
	Kit de plaquettes de frein, frein à disque
	Disque de frein
	arrière
	Essieu arrière gauche
	Essieu arrière droit
	Essieu avant droit
+PR	pour numéro PR
+ S	avec vis/boulons
+ UK	Grande-Bretagne
+ WE	préparé pour indicateur d'usure
+ WK	avec indicateur d'usure
+ Zub	avec accessoires
17"	17"
230 V	230 V
3	3
50 - 60 Hz	50 - 60 Hz
Abfrage Produktbild vorhanden	Abfrage Produktbild vorhanden
AKE	Système de freinage, Akebono
Article number of recom-mended accessories	Référence de l'accessoire recommandé
ATE Ceramic	Designation d'article complémentaire, ATE Ceramic
B	revêtu

FR	
Bolt Hole Circle Ø [mm]	Cercle de percage -Ø [mm]
Bore Ø [mm]	Alésage-Ø [mm]
BOS	Système de freinage, Bosch
Brake Disc Thickness [mm]	Épaisseur du disque de frein [mm]
Brake Size	Dimension des freins
BRE	Système de freinage, Brembo
CB compat-ible package	Emballage LS
Centering Diameter [mm]	Diamètre du centrage [mm]
Code	Modèle
Content [litre]	Capacité [litres]
Country specific package and status data	Informations d'emballage et d'état spéc-ifiques aux pays
Disc Brake	Frein à disque
Electric-pneumatic	pneumatique-électrique
Equipment Code	Code d'équipement
Filling hose length [m]	Tuyau de remplissage [m]
Flange Hole Diameter [mm]	Diamètre du trou de bride [mm]
for single tyres	pour pneus simples
for vehicles with 12V main current	pour véhicules avec réseau de bord de 12V
for vehicles with 3rd seating row	pour véhicules avec 3ième rangée de sièges
for vehicles with 48V main current	pour véhicules avec réseau de bord de 48V

© 2023 Continental Aftermarket & Services GmbH

Technical translations

Technische Übersetzungen - Traducciones tecnicas - Traductions techniques - Traduzioni tecniche

FR	
for vehicles with AMG Sports Package	pour véhicules avec équipement-sport AMG
for vehicles without AMG sports package	pour véhicules sans paquet-sport AMG
for vehicles without sports brake system	pour véhicules sans système de freinage sport
for vehicles with sports package	pour véhicules avec équipement sport
HC	à haute teneur en carbone
Height [mm]	Hauteur [mm]
Height 1 [mm]	Hauteur 1 [mm]
Height 2 [mm]	Hauteur 2 [mm]
L=	Longueur [mm]
Machining	Traitement
MAN	Système de freinage, Mando
Minimum thickness [mm]	Épaisseur minimum [mm]
not for trim level	pas pour variante d'équipement
not for vehicles with reinforced brakes	pas pour véhicules avec frein assisté
Number of Holes	Nombre de trous
Observe dimensions	Respecter les dimensions
Piston Diameter [mm]	Diamètre du piston [mm]
Produkttyp vorhanden	Produkttyp vorhanden
Reached Quality Gates	Reached Quality Gates
replacement part	Pièce de rechange
Rim Size [in]	Dimension de la jante [pouces]

FR	
Service exchange part	Echange standard
Surface	Surface
Thickness [mm]	Épaisseur [mm]
Thickness 1 [mm]	Épaisseur 1 [mm]
Thickness 2 [mm]	Épaisseur 2 [mm]
TRW	Système de freinage, Lucas / TRW
usage number	Numéro d'utilisation
Vehicle Main Current	Type de réseau de bord
- WE	non préparé pour indicateur d'usure
Width [mm]	Largeur [mm]
with anti-squeak plate	avec tôle anti-bruit
with brake caliper screws	avec vis d'étrier de frein
without acoustic wear warning	sans indicateur d'usure
without hollow screw	sans vis creuse
- WK	contact de signal d'usure exclu
Yes	Oui
Ø	Diamètre intérieur [mm] Diamètre extérieur [mm]
→	Année à partir de Nº de châssis à partir de
→	Année jusqu'à
→ to holder size [l]	jusqu'à contenu [l]

© 2023 Continental Aftermarket & Services GmbH

Technical translations

Technische Übersetzungen - Traducciones tecnicas - Traductions techniques - Traduzioni tecniche

IT	
	Flessibile del freno
	Cavo comando, Freno stazionamento
	Pinza freno
	Kit pastiglie freno, Freno a disco
	Discofreno
	posteriore
	Assale posteriore Sx
	Assale posteriore Dx
	Assale anteriore Dx
+PR	per N° PR
+ S	con bulloni/viti
+ UK	Gran Bretagna
+ WE	Predisposto per contatto segnalazione usura
+ WK	con segnalatore acustico usura
+ Zub	con accessori
17"	17"
230 V	230 V
3	3
50 - 60 Hz	50 - 60 Hz
Abfrage Produktbild vorhanden	Abfrage Produktbild vorhanden
AKE	Sistema frenante, Akebono
Article number of recom-mended accessories	N° articolo accessorio consigliato
ATE Ceramic	Denominazione aggiuntiva dell'articolo, ATE Ceramic
B	rivestito

IT	
Bolt Hole Circle Ø [mm]	Cerchio foro-Ø [mm]
Bore Ø [mm]	Alesaggio-Ø [mm]
BOS	Sistema frenante, Bosch
Brake Disc Thickness [mm]	Spessore disco freno [mm]
Brake Size	Misura freno
BRE	Sistema frenante, Brembo
CB compat-ible package	Imballaggio self-service
Centering Diameter [mm]	Diametro centraggio [mm]
Code	Modello
Content [litre]	Capacità [litri]
Country specific package and status data	Informazioni di imballaggio e di stato specifiche per i diversi Paesi
Disc Brake	Freno a disco
Electric-pneumatic	elettrico-pneumatico
Equipment Code	Codice dotazione
Filling hose length [m]	Lunghezza flessibile di carico [m]
Flange Hole Diameter [mm]	Diametro foro flangia [mm]
for single tyres	per pneumatici singoli
for vehicles with 12V main current	per veicoli con impianto elettrico di bordo a 12 Volt
for vehicles with 3rd seating row	per veicoli con 3ª fila sedili
for vehicles with 48V main current	per veicoli con impianto elettrico di bordo a 48 Volt

© 2023 Continental Aftermarket & Services GmbH

Technical translations

Technische Übersetzungen - Traducciones tecnicas - Traductions techniques - Traduzioni tecniche

IT	
for vehicles with AMG Sports Package	per veicoli con pacchetto sportivo AMG
for vehicles without AMG sports package	per veicoli senza pacchetto sportivo AMG
for vehicles without sports brake system	per veicoli senza impianti frenante sportivo
for vehicles with sports package	per veicoli con pacchetto sportivo
HC	ad alto tenore di carbonio
Height [mm]	Altezza [mm]
Height 1 [mm]	Altezza 1 [mm]
Height 2 [mm]	Altezza 2 [mm]
L=	Lunghezza [mm]
Machining	Lavorazione/Trattamento
MAN	Sistema frenante, Mando
Minimum thickness [mm]	Spessore min. [mm]
not for trim level	non per tipo equipaggiamento
not for vehicles with reinforced brakes	Non per veicoli con freno rinforzato
Number of Holes	N° fori
Observe dimensions	Osservare le misure
Piston Diameter [mm]	Diametro pistone [mm]
Produkttyp vorhanden	Produkttyp vorhanden
Reached Quality Gates	Reached Quality Gates
replacement part	Ricambio di rotazione
Rim Size [in]	Misura cerchione [pollici]

IT	
Service exchange part	Ricambio di rotazione
Surface	Superficie
Thickness [mm]	Spessore [mm]
Thickness 1 [mm]	Spessore 1 [mm]
Thickness 2 [mm]	Spessore 2 [mm]
TRW	Sistema frenante, Lucas / TRW
usage number	Codice d'uso
Vehicle Main Current	Tipo imp. elettrico di bordo
- WE	Non predisposto per contatto segnalazione usura
Width [mm]	Larghezza [mm]
with anti-squeak plate	con lamierino anticigolío
with brake caliper screws	con bulloni pinza freno
without acoustic wear warning	senza segnalatore acustico usura
without hollow screw	senza vite cava
- WK	senza contatto segnalazione usura
Yes	Sì
Ø	Diametro interno [mm] Diametro esterno [mm]
→	Anno da N° telaio da
→	Anno fino a
→ to holder size [l]	fino a formato confezione [l]

© 2023 Continental Aftermarket & Services GmbH

ATE – A Trademark of the Continental Corporation

Continental Aftermarket & Services GmbH

Sodener Straße 9
D-65824 Schwalbach
Tel. +49 (0) 6196 87 0
Fax +49 (0) 6196 865 71

www.ate.de

Continental Automotive Trading Italia S.r.l.

Via Matteotti, 62
I-20092 Cinisello Balsamo (MI)
Tel. +39 02 35680 1
Fax +39 02 35680 325
E-Mail: supporto@ continental-corporation.com

www.ate-freni.it

Continental Automotive France SAS

1 rue de Clairefontaine
F-78120 Rambouillet
Tél. +33 (0)1 34 57 40 19
Fax +33 (0)1 34 57 40 72

www.ate-freinage.fr

Continental Automotive Spain, S.A.

C/ Sepúlveda, 11
E-28108 Alcobendas (Madrid) Phone +34 (0) 657 21 21
Fax +34 (0)91 657 21 49

www.frenos-ate.es