ATE New Parts
ATE Neuteile

10/2021

Brakethrough Technology

Erstklassig
First-class

Besser ist besser

Wenn es um Qualität geht, genügt uns ein „sehr gut“ noch lange nicht. Wir erfüllen hohe Ansprüche an das Qualitätsmanagement und die europäische Sicherheitsnorm ECE-R90 wird von ATE sogar übertroffen. Zudem führen wir zahlreiche zusätzliche Tests durch, unter anderem zu Verschleiß und Wärmeleistung.

Auch Nachhaltigkeit ist uns wichtig: Wir stellen die Mischungen für ATE Bremsbeläge auf kupferfreie Materialien um und setzen bei ATE Ceramic auf geringen Abrieb. Nutzen ausschließlich umweltfreundliches Material für die Beschichtung von Bremsscheiben. Und bereiten Produkte wie Bremssättel wieder auf.

Better is better

When it comes to quality, “very good” is simply not good enough for us. We meet high standards of quality management – and ATE even exceeds the European safety standard ECE-R90. We also perform many additional tests, including wear and thermal performance.

Sustainability is also important to us: we convert the compounds for ATE brake pads to copperfree materials and opt for low abrasion with ATE Ceramic. We only use environmentally friendly material for the coating of brake discs – and we remanufacture products like brake callipers.

© 2021 Continental Aftermarket & Services GmbH

10/2021

EN Product details

DE Produktdetails

ES Descripción del producto

FR Présentation du produit

IT Panoramica prodotti

© 2021 Continental Aftermarket & Services GmbH

03.0137-9343.2 669343

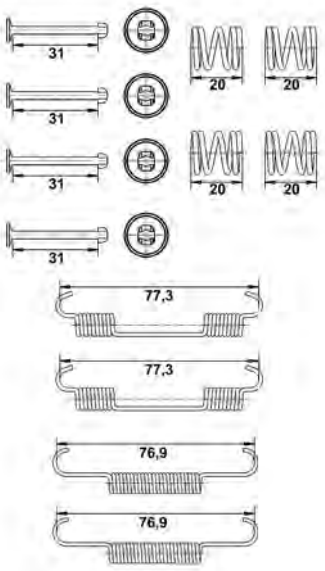

Accessory Kit, parking brake shoes

INFINITI, NISSAN

03.0137-9344.2 669344

Accessory Kit, parking brake shoes

IVECO

03.0137-9346.2 669346

Accessory Kit, brake shoes

FIAT, MITSUBISHI

03.0137-9347.2 669347

Accessory Kit, brake shoes

MITSUBISHI, SMART

© 2021 Continental Aftermarket & Services GmbH

03.0137-9350.2 669350

Accessory Kit, parking brake shoes

LAND ROVER

13.0460-0516.2 610516

Accessory Kit, disc brake pad

Disc Brake

AUDI, SEAT, SKODA, VW

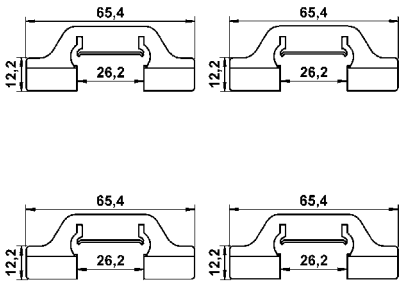

13.0460-0517.2 610517

Accessory Kit, disc brake pad

Disc Brake

AUDI

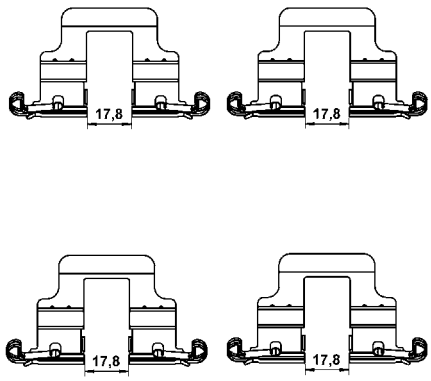

13.0460-0519.2 610519

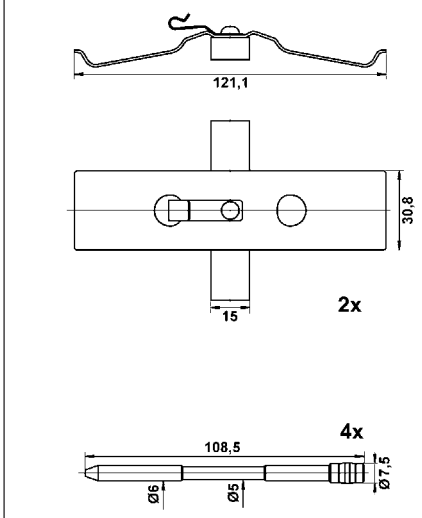

Accessory Kit, disc brake pad

Disc Brake

VW

13.0460-2631.2 602631

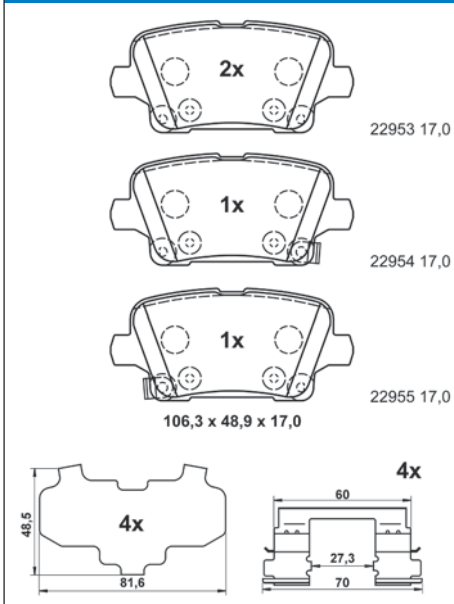

Brake Pad Set, disc brake

Thickness [mm] 17

Width [mm] 106.3

Height [mm] 48.9

+ WK

+ Zub

TRW

with anti-squeak plate

OPEL, VAUXHALL

13.0460-3886.2 603886

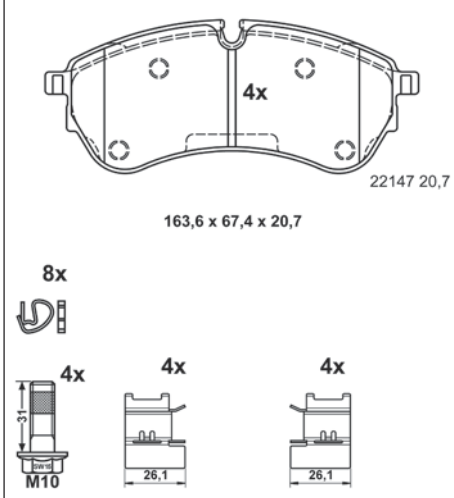

Brake Pad Set, disc brake

Thickness [mm] 20.7

Width [mm] 163.6

Height [mm] 67.4

+ WE / - WK

+ Zub

with brake caliper screws

VW

© 2021 Continental Aftermarket & Services GmbH

13.0460-5538.2 605538

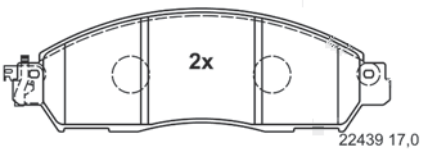

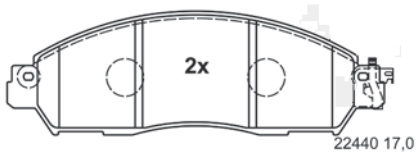

165,6 x 54,1 x 17,0

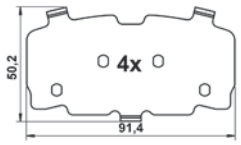

Brake Pad Set, disc brake

Thickness [mm] 17

Width [mm] 165.6

Height [mm] 54.1

+ WK

with anti-squeak plate

NISSAN, RENAULT

13.0470-2631.2 LD2631

ATE Ceramic

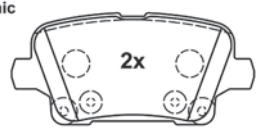

22953 17,0

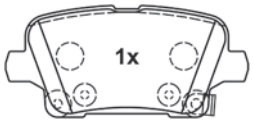

22954 17,0

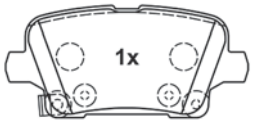

22955 17,0

106,3 x 48,9 x 17,0

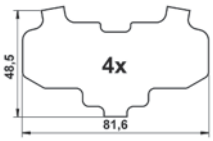

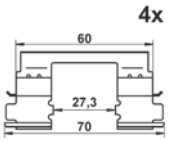

Brake Pad Set, disc brake

Thickness [mm] 17

Width [mm] 106.3

Height [mm] 48.9

+ WK

+ Zub

TRW

with anti-squeak plate

OPEL, VAUXHALL

24.0110-0420.1 410420

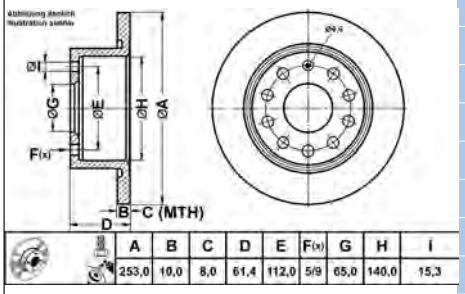

	A	B	C	D	E	F(x)	G	H	I
	253,0	10,0	8,0	61,4	112,0	5/9	65,0	140,0	15,3

Brake Disc

Height [mm] 61.4

Bore Ø [mm] 15.3

Brake Disc Thickness [mm] 10

Minimum thickness [mm] 8

Ø 140

Ø 253

Number of Holes: 5

Centering Diameter [mm]: 65

Bolt Hole Circle Ø [mm]: 112

SurfaceB

+ S

SKODA

© 2021 Continental Aftermarket & Services GmbH

24.0111-0189.2 411189

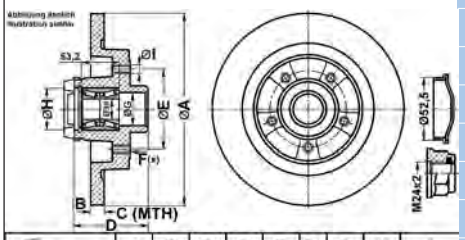

A	B	C	D	E	F(x)	G	H	I
290,0	11,0	9,5	91,1	114,3	5	52,3	62,0	M12x1,5

Brake Disc

Height [mm] 91.1

Brake Disc Thickness [mm] 11

M12x1,5

Minimum thickness [mm] 9.5

Ø 62

Ø 290

Number of Holes: 5

Centering Diameter [mm]: 52.3

Bolt Hole Circle Ø [mm]: 114.3

SurfaceB

Support plate diameter [mm]: 30

+ RLG / + ABS Ring

RENAULT

24.0122-0314.1 422314

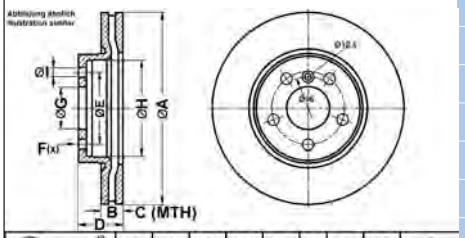

A	B	C	D	E	F(x)	G	H	I
294,0	22,0	20,4	45,1	112,0	5	67,0	150,0	16,5

Brake Disc

Height [mm] 45.1

Bore Ø [mm] 16.5

Vented

Brake Disc Thickness [mm] 22

Minimum thickness [mm] 20.4

Machining: HC

Ø 150

Ø 294

Number of Holes: 5

Centering Diameter [mm]: 67

Bolt Hole Circle Ø [mm]: 112

SurfaceB

+ S

BMW, MINI

24.0710-2056.3 360577

Wheel Speed Sensor

L= 722

L= 645

MERCEDES-BENZ

© 2021 Continental Aftermarket & Services GmbH

24.0710-2057.3 360578

Wheel Speed Sensor

L= 988

L= 880

BMW

24.0710-2070.3 360591

Wheel Speed Sensor

L= 1,035

L= 958

MERCEDES-BENZ

24.0710-2071.3 360592

Wheel Speed Sensor

L= 703

L= 630

MERCEDES-BENZ

24.0710-2074.3 360595

Wheel Speed Sensor

L= 640

L= 590

MERCEDES-BENZ

24.0710-2079.3 360600

Wheel Speed Sensor

L= 1,020

L= 900

BMW

© 2021 Continental Aftermarket & Services GmbH

24.3387-1747.5 241423

Brake Caliper

+ FSB
Piston Diameter [mm]: 38
ALU
Service exchange part
without holder
ATE

MAZDA

24.3387-1748.5 241424

Brake Caliper

+ FSB
Piston Diameter [mm]: 38
ALU
Service exchange part
without holder
ATE

MAZDA

24.3431-1719.5 241377

Brake Caliper

Piston Diameter [mm]: 43
Service exchange part
without holder

FORD, MAZDA

24.3431-1720.5 241378

Brake Caliper

Piston Diameter [mm]: 43
Service exchange part
without holder

FORD, MAZDA

24.3441-1705.5 241367

Brake Caliper

Piston diameter 1 [mm]: 44
Piston diameter 2 [mm]: 48
Service exchange part
without holder
BRE

CITROËN, FIAT, PEUGEOT

© 2021 Continental Aftermarket & Services GmbH

24.3441-1706.5 241368

Brake Caliper

Piston diameter 1 [mm]: 44

Piston diameter 2 [mm]: 48

Service exchange part

without holder

BRE

CITROËN, FIAT, PEUGEOT

24.3541-1825.5 241137

Brake Caliper

Piston Diameter [mm]: 54

Service exchange part

without holder

TRW

HONDA

24.3541-1861.5 241277

Brake Caliper

Piston Diameter [mm]: 54

Service exchange part

without holder

TRW

BMW, MINI

24.3571-1745.5 240705

Brake Caliper

Piston Diameter [mm]: 57

Service exchange part

without holder

TRW

PEUGEOT

24.3571-1801.5 241387

Brake Caliper

Piston Diameter [mm]: 57

Service exchange part

without holder

AUDI, CUPRA, SEAT, SKODA, VW

© 2021 Continental Aftermarket & Services GmbH

24.3571-1802.5 241388

Brake Caliper

Piston Diameter [mm]: 57

Service exchange part

without holder

AUDI, CUPRA, SEAT, SKODA, VW

24.3601-1743.5 241369

Brake Caliper

Piston Diameter [mm]: 60

Cast Iron

Service exchange part

without holder

ADV

SUZUKI

24.4123-1731.3 011094

Brake Master Cylinder

Ø 23.8

M12x1

ALU

2x

L1= 32

without brake fluid reservoir

FIAT, JEEP

24.8190-0808.2 620808

Warning Contact, brake pad wear

L= 763

Disc Brake

BMW

24.8190-0824.2 620824

Warning Contact, brake pad wear

L= 847

Disc Brake

BMW

© 2021 Continental Aftermarket & Services GmbH

24.8190-0825.2 620825

Warning Contact, brake pad wear

L= 748

Disc Brake

BMW

24.8190-0826.2 620826

Warning Contact, brake pad wear

L= 754

Disc Brake

BMW

Notes

© 2021 Continental Aftermarket & Services GmbH

EN Applications of vehicles

DE Fahrzeugverwendungen

ES Aplicaciones

FR Applications

IT Applicazioni autoveicoli

10/2021

© 2021 Continental Aftermarket & Services GmbH

	kW				! #			
AUDI - A3 (8V1, 8VK) 04/12→10/20								
Brake Caliper								
1.0 TFSI	85	07/16→12/17	←	; +PR 1ZA / 1ZD		**24.3571-1801.5**	**241387**	without holder
1.2 TFSI	77 - 81	02/13→08/16	←	; +PR 1ZA / 1ZD		**24.3571-1802.5**	**241388**	without holder
1.4 TFSI	90 - 103	04/12→08/16						
1.4 TSI	110	05/14→12/17						
1.5 TFSI	110	05/17→12/17						
1.6 TDI	77 - 85	10/12→10/20						
1.8 TFSI	132	04/12→08/16						
1.8 TFSI quattro	132	08/12→08/16						
2.0 TDI	81 - 135	04/12→10/20						
2.0 TDI quattro	110 - 135	10/12→12/17						
2.0 TFSI	140	05/16→12/17						
2.0 TFSI quattro	140	05/16→12/17						
S3 quattro	206 - 228	11/12→12/17						
AUDI - A3 Cabriolet (8V7, 8VE) 10/13→								
Brake Caliper								
1.4 TFSI	85 - 103	10/13→	←	; +PR 1ZA / 1ZD		**24.3571-1801.5**	**241387**	without holder
1.4 TSI	110	05/14→10/20	←	; +PR 1ZA / 1ZD		**24.3571-1802.5**	**241388**	without holder
1.5 TFSI	110	05/17→10/18						
1.6 TDI	81 - 85	02/14→10/20						
1.8 TFSI	125 - 132	10/13→10/20						
1.8 TFSI quattro	132	03/14→						
2.0 TDI	100 - 135	10/13→						
2.0 TDI quattro	110 - 135	03/14→10/20						
2.0 TFSI	140	05/16→10/20						
2.0 TFSI quattro	140 - 162	05/14→10/20						
35 TFSI	110	10/18→10/20						
40 TFSI	140	11/18→10/20						
40 TFSI quattro	140	11/18→10/20						
S3 quattro	210 - 228	03/14→						
AUDI - A3 Limousine (8VS, 8VM) 05/13→								
Brake Caliper								
1.0 TFSI	85	07/16→10/20	←	; +PR 1ZA / 1ZD		**24.3571-1801.5**	**241387**	without holder
1.2 TFSI	77 - 81	10/13→	←	; +PR 1ZA / 1ZD		**24.3571-1802.5**	**241388**	without holder
1.4 TFSI	90 - 103	05/13→						
1.4 TSI	110	05/14→10/20						
1.5 TFSI	110	05/17→10/18						
1.6 TDI	77 - 85	09/13→						
1.6 TDI quattro	81	05/15→						
1.8 TFSI	125 - 132	05/13→						
1.8 TFSI quattro	132	11/13→						
2.0 TDI	81 - 135	05/13→						
2.0 TDI quattro	110 - 135	10/13→10/20						
2.0 TFSI	140 - 162	11/15→10/20						
2.0 TFSI quattro	140	05/16→10/20						
30 TDI	85	07/18→10/20						
30 TFSI	85	07/18→10/20						
35 TDI	110	07/18→10/20						
35 TFSI	110	10/18→10/20						
40 TDI quattro	135	07/18→07/19						
40 TFSI	140	07/18→10/20						
40 TFSI quattro	140	07/18→10/20						
RS3 quattro	294	04/17→10/20						
S3 quattro	206 - 228	10/13→						

© 2021 Continental Aftermarket & Services GmbH

	kW				! #			
AUDI - A3 Sportback (8VA, 8VF) 09/12→								
Brake Caliper								
1.0 TFSI	85	07/16→10/20	←	; +PR 1ZA / 1ZD		**24.3571-1801.5**	**241387**	without holder
1.2 TFSI	77 - 81	05/13→	←	; +PR 1ZA / 1ZD		**24.3571-1802.5**	**241388**	without holder
1.4 TFSI	90 - 103	09/12→						
1.4 TFSI e-tron	110	05/14→10/20						
1.4 TFSI g-tron	81	11/13→10/20						
1.4 TSI	110	05/14→10/20						
1.5 TFSI	110	05/17→10/18						
1.6 TDI	77 - 85	10/12→						
1.6 TDI quattro	81	05/15→08/16						
1.8 TFSI	132	09/12→						
1.8 TFSI quattro	132	05/13→						
2.0 TDI	81 - 135	09/12→10/20						
2.0 TDI quattro	110 - 135	02/13→10/20						
2.0 TFSI	140	05/16→10/20						
2.0 TFSI quattro	140	05/16→10/20						
30 g-tron	96	11/18→10/20						
30 TDI	85	07/18→10/20						
30 TFSI	85	07/18→10/20						
35 TDI	110	07/18→10/20						
35 TFSI	110	10/18→10/20						
40 TDI quattro	135	07/18→10/20						
40 TFSI	140	07/18→10/20						
40 TFSI quattro	140	07/18→10/20						
S3 quattro	206 - 228	11/12→						
AUDI - A4 Allroad B8 (8KH) 04/09→05/16								
Accessory Kit, disc brake pad								
2.0 TDI quattro	100 - 140	04/09→05/16	→	+PR 1KW / GP0 / GP1 / GP2		**13.0460-0517.2**	**610517**	
2.0 TFSI quattro	155 - 165	04/09→05/16						
3.0 TDI quattro	176 - 180	04/09→05/16						
2.0 TDI quattro	130	11/11→05/16	→	01/12→; +PR 1KW / GP0 / GP1 / GP2		**13.0460-0517.2**	**610517**	
AUDI - A4 B6 (8E2) 11/00→12/05								
Accessory Kit, disc brake pad								
1.6	75	11/00→12/04	→	8E-4-180001→; +PR 1KD / 1KP		**13.0460-0516.2**	**610516**	
1.8 T	110 - 140	11/00→12/04						
1.8 T quattro	110 - 140	11/00→12/04						
1.9 TDI	74 - 96	11/00→12/04						
1.9 TDI quattro	96	11/01→12/04						
2.0	96	11/00→12/04						
2.0 FSI	110	07/02→12/04						
2.4	120 - 125	09/01→12/04						
2.5 TDI	114 - 120	08/01→12/04						
2.5 TDI quattro	132	11/00→12/04						
1.9 TDI	85	06/04→12/04	→	+PR 1KD / 1KP		**13.0460-0516.2**	**610516**	
3.0	160	04/01→12/04	→	→ 8E-7-300000; +PR 1KD / 1KP		**13.0460-0516.2**	**610516**	
3.0 quattro	160	04/01→12/04						
3.0	162	11/00→12/04	→	12/00→; → 8E-7-300000; +PR 1KD / 1KP		**13.0460-0516.2**	**610516**	
3.0 quattro	162	11/00→12/04						
AUDI - A4 B6 Avant (8E5) 02/00→12/05								
Accessory Kit, disc brake pad								
1.6	75	09/01→12/04	→	8E-4-180001→; +PR 1KD / 1KP		**13.0460-0516.2**	**610516**	
1.8 T	110 - 140	09/01→12/04						
1.8 T quattro	110 - 140	09/01→12/04						
1.9 TDI	74 - 96	09/01→12/04						
1.9 TDI quattro	96	11/01→12/04						
2.0	96	09/01→12/04						
2.0 FSI	110	07/02→12/04						
2.4	120 - 125	09/01→12/04						
↓								

	kW				! #		
AUDI - A4 B6 Avant (8E5) 02/00→12/05							
Accessory Kit, disc brake pad							
2.5 TDI 2.5 TDI quattro	114 - 120 132	09/01→12/04 09/01→12/04		8E-4-180001→; +PR 1KD / 1KP		**13.0460-0516.2**	**610516**
1.9 TDI	85	06/04→12/04		+PR 1KD / 1KP		**13.0460-0516.2**	**610516**
3.0 3.0 quattro	160 - 162 160 - 162	04/01→12/04 04/01→12/04		→ 8E-7-300000; +PR 1KD / 1KP		**13.0460-0516.2**	**610516**
AUDI - A4 B6 Cabriolet (8H7) 01/02→12/09							
Accessory Kit, disc brake pad							
1.8 T 1.8 T quattro 2.0 2.4 2.5 TDI 3.0 3.0 quattro	120 120 96 120 - 125 120 162 162	07/02→12/05 05/03→12/05 09/04→12/05 04/02→12/05 08/02→12/05 04/02→12/05 05/03→12/05		+PR 1KD / 1KP		**13.0460-0516.2**	**610516**
3.0	160	04/02→12/05		→ 8E-7-300000; +PR 1KD / 1KP		**13.0460-0516.2**	**610516**
AUDI - A4 B7 (8EC) 11/04→06/08							
Accessory Kit, disc brake pad							
1.6 1.8 T 1.8 T quattro 2.0 2.5 TDI	75 120 120 96 120	11/04→06/08 11/04→06/08 11/04→06/08 11/04→06/08 11/04→05/06		8E-4-180001→; +PR 1KD / 1KP		**13.0460-0516.2**	**610516**
1.9 TDI 2.0 TDI 2.0 TDI 16V 2.0 TDI quattro 2.0 TFSI 2.0 TFSI quattro	85 103 - 125 103 103 - 125 125 - 162 147 - 162	11/04→06/08 11/04→06/08 11/04→06/08 01/06→06/08 11/04→06/08 11/04→06/08		+PR 1KD / 1KP		**13.0460-0516.2**	**610516**
2.0 TDI	93	11/05→11/06		06/06→; +PR 1KD / 1KP		**13.0460-0516.2**	**610516**
3.0 quattro	160	11/04→07/06		→ 8E-7-300000; +PR 1KD / 1KP		**13.0460-0516.2**	**610516**
AUDI - A4 B7 Avant (8ED) 11/04→06/08							
Accessory Kit, disc brake pad							
1.6 1.8 T 1.8 T quattro 2.0 2.5 TDI	75 120 120 96 120	11/04→06/08 11/04→06/08 11/04→06/08 11/04→06/08 11/04→05/06		8E-4-180001→; +PR 1KD / 1KP		**13.0460-0516.2**	**610516**
1.9 TDI 2.0 TDI 2.0 TDI 16V 2.0 TDI quattro 2.0 TFSI 2.0 TFSI quattro	85 103 - 125 103 103 - 125 125 - 162 147 - 162	11/04→06/08 11/04→06/08 11/04→06/08 01/06→06/08 11/04→06/08 11/04→06/08		+PR 1KD / 1KP		**13.0460-0516.2**	**610516**
2.0 TDI	93	11/05→11/06		06/06→; +PR 1KD / 1KP		**13.0460-0516.2**	**610516**
3.0 3.0 quattro	160 160	11/04→05/06 11/04→07/06		→ 8E-7-300000; +PR 1KD / 1KP		**13.0460-0516.2**	**610516**
AUDI - A4 B7 Cabriolet (8HE) 01/02→12/09							
Accessory Kit, disc brake pad							
1.8 T	120	01/06→03/09		8E-4-180001→; +PR 1KD / 1KP		**13.0460-0516.2**	**610516**
2.0 TDI 2.0 TFSI 16V	100 - 103 147	01/06→03/09 01/06→03/09		→ 11/08; +PR 1KD / 1KP		**13.0460-0516.2**	**610516**
AUDI - A4 B8 (8K2) 08/07→12/15							
Accessory Kit, disc brake pad							
1.8 TFSI 1.8 TFSI quattro ↓	88 - 118 118	11/07→12/15 09/08→03/12		+PR 1KW / 2EH; + eFSB		**13.0460-0517.2**	**610517**

© 2021 Continental Aftermarket & Services GmbH

	kW				! #			
AUDI - A4 B8 (8K2) 08/07→12/15								
Accessory Kit, disc brake pad								
2.0 TDI	88 - 140	11/07→12/15	➡	+PR 1KW / 2EH; + eFSB		**13.0460-0517.2**	**610517**	
2.0 TDI quattro	105 - 140	01/08→12/15						
2.0 TFSI	132 - 165	06/08→12/15						
2.0 TFSI flexible fuel	132	11/09→12/15						
2.0 TFSI flexible fuel quattro	132	11/09→12/15						
2.0 TFSI quattro	132 - 165	06/08→12/15						
2.7 TDI	120 - 140	11/07→03/12						
3.0 TDI	150	11/11→12/15						
3.0 TDI quattro	155 - 180	11/07→12/15						
3.0 TFSI quattro	200	02/12→12/15						
3.2 FSI	195	09/08→03/12						
3.2 FSI quattro	195	11/07→03/12						
1.8 TFSI	125	11/11→12/15	➡	01/12→; +PR 1KW / 2EH; + eFSB		**13.0460-0517.2**	**610517**	
1.8 TFSI quattro	125	11/11→12/15						
AUDI - A4 B8 Avant (8K5) 11/07→12/15								
Accessory Kit, disc brake pad								
1.8 TFSI	88	04/08→12/15	➡	+PR 1KW / 2EH; + eFSB		**13.0460-0517.2**	**610517**	
1.8 TFSI quattro	118	09/08→03/12						
2.0 TDI	88 - 140	04/08→12/15						
2.0 TDI quattro	105 - 140	04/08→12/15						
2.0 TFSI	132 - 165	06/08→12/15						
2.0 TFSI flexible fuel	132	11/09→12/15						
2.0 TFSI flexible fuel quattro	132	11/09→12/15						
2.0 TFSI quattro	155 - 165	06/08→12/15						
2.7 TDI	120	06/08→03/12						
3.0 TDI	150	11/11→12/15						
3.0 TDI quattro	155 - 180	04/08→12/15						
3.0 TFSI quattro	200	02/12→12/15						
3.2 FSI	195	09/08→03/12						
3.2 FSI quattro	195	04/08→03/12						
1.8 TFSI	118	11/07→03/12	➡	04/08→; +PR 1KW / 2EH; + eFSB		**13.0460-0517.2**	**610517**	
1.8 TFSI	125	11/11→12/15	➡	01/12→; +PR 1KW / 2EH; + eFSB		**13.0460-0517.2**	**610517**	
1.8 TFSI quattro	125	11/11→12/15						
2.7 TDI	140	04/08→03/12	➡	06/08→; +PR 1KW / 2EH; + eFSB		**13.0460-0517.2**	**610517**	
AUDI - A5 (8T3) 06/07→01/17								
Accessory Kit, disc brake pad								
1.8 TFSI	118 - 130	10/07→01/17	➡	+PR 1KW / 2EH		**13.0460-0517.2**	**610517**	
2.0 TDI	125 - 140	08/08→01/17						
2.0 TDI quattro	125 - 140	08/08→01/17						
2.0 TFSI	132 - 169	06/08→01/17						
2.0 TFSI quattro	155 - 169	06/08→01/17						
2.7 TDI	120 - 140	06/07→03/12						
3.0 TDI	150	10/11→01/17						
3.0 TDI quattro	155 - 180	06/07→01/17						
3.0 TFSI quattro	200	12/11→01/17						
3.2 FSI	195	06/07→03/12						
3.2 FSI quattro	195	06/07→03/12						
2.0 TDI	120	08/08→01/17	➡	10/08→; +PR 1KW / 2EH		**13.0460-0517.2**	**610517**	
2.0 TFSI quattro	162	03/12→01/17	➡	05/13→; +PR 1KW / 2EH		**13.0460-0517.2**	**610517**	
AUDI - A5 Cabriolet (8F7) 02/09→01/17								
Accessory Kit, disc brake pad								
1.8 TFSI	118 - 130	09/09→01/17	➡	+PR 1KW / 2EH; + eFSB		**13.0460-0517.2**	**610517**	
2.0 TDI	110 - 140	05/09→01/17						
↓								

	kW				! #		
AUDI - A5 Cabriolet (8F7) 02/09→01/17							
Accessory Kit, disc brake pad							
2.0 TDI quattro	130 - 140	01/12→01/17	➡	+PR 1KW / 2EH; + eFSB		**13.0460-0517.2**	**610517**
2.0 TFSI	132 - 169	03/09→01/17					
2.0 TFSI quattro	155 - 169	03/09→01/17					
2.7 TDI	120 - 140	03/09→03/12					
3.0 TDI	150	10/11→01/17					
3.0 TDI quattro	160 - 180	03/09→01/17					
3.0 TFSI quattro	200	11/11→01/17					
3.2 FSI	195	03/09→03/12					
3.2 FSI quattro	195	03/09→03/12					
2.0 TDI	105	10/11→05/15	➡	11/11→; +PR 1KW / 2EH; + eFSB		**13.0460-0517.2**	**610517**
2.0 TFSI quattro	162	03/12→01/17	➡	05/13→; +PR 1KW / 2EH; + eFSB		**13.0460-0517.2**	**610517**
AUDI - A5 Sportback (8TA) 07/07→01/17							
Accessory Kit, disc brake pad							
1.8 TFSI	106 - 130	11/09→01/17	➡	+PR 1KW / 2EH		**13.0460-0517.2**	**610517**
2.0 TDI	100 - 140	09/09→01/17					
2.0 TDI quattro	125 - 140	09/09→01/17					
2.0 TFSI	132 - 169	09/09→01/17					
2.0 TFSI quattro	155 - 169	09/09→01/17					
2.7 TDI	120 - 140	09/09→03/12					
3.0 TDI	150	10/11→01/17					
3.0 TDI quattro	160 - 180	09/09→01/17					
3.0 TFSI quattro	200	12/11→01/17					
3.2 FSI quattro	195	09/09→03/12					
AUDI - A6 C5 (4B2) 01/97→12/05							
Accessory Kit, disc brake pad							
1.8	92	07/97→01/05	➡	06/01→		**13.0460-0516.2**	**610516**
1.8 T	110 - 132	01/97→01/05					
1.8 T quattro	110 - 132	02/97→01/05					
1.9 TDI	85	07/00→01/05					
2.4	100 - 121	02/97→01/05					
2.4 quattro	120 - 121	02/97→01/05					
2.5 TDI	110 - 132	07/97→01/05					
2.5 TDI quattro	110 - 132	07/97→01/05					
2.7 T	169	02/99→01/05					
2.7 T quattro	169	12/97→01/05					
2.8	140 - 142	02/97→01/05					
2.8 quattro	142	02/97→01/05					
4.2 quattro	220	11/98→01/05					
S6 quattro	250	09/99→01/05					
1.9 TDI	96	08/01→01/05	➡			**13.0460-0516.2**	**610516**
2.0	96	08/01→01/05					
2.4	125	08/01→01/05					
2.4 quattro	125	08/01→01/05					
2.5 TDI	114 - 120	08/01→01/05					
2.7 T quattro	184	08/01→01/05					
3.0	160 - 162	06/01→01/05					
3.0 quattro	160 - 162	06/01→01/05					
3.7	191	03/99→01/05					
3.7 quattro	191	03/99→01/05					
AUDI - A6 C5 Avant (4B5) 11/97→01/05							
Accessory Kit, disc brake pad							
1.8	92	12/97→01/05	➡	06/01→		**13.0460-0516.2**	**610516**
1.8 T	110 - 132	12/97→01/05					
↓							

© 2021 Continental Aftermarket & Services GmbH

	kW				! #			
AUDI - A6 C5 Avant (4B5) 11/97→01/05								
Accessory Kit, disc brake pad								
1.8 T quattro	110 - 132	12/97→01/05	➡	06/01→		**13.0460-0516.2**	**610516**	
1.9 TDI	85	07/00→01/05						
2.4	100 - 121	12/97→01/05						
2.4 quattro	120 - 121	12/97→01/05						
2.5 TDI	110 - 132	12/97→01/05						
2.5 TDI quattro	110 - 132	12/97→01/05						
2.7 T	169	02/99→01/05						
2.7 T quattro	169	12/97→01/05						
2.8	140 - 142	12/97→01/05						
2.8 quattro	142	12/97→01/05						
4.2 quattro	220	11/98→01/05						
S6 quattro	250	09/99→01/05						
1.9 TDI	96	08/01→01/05	➡			**13.0460-0516.2**	**610516**	
2.0	96	08/01→01/05						
2.4	125	08/01→01/05						
2.4 quattro	125	08/01→01/05						
2.5 TDI	114 - 120	08/01→01/05						
2.7 T quattro	184	08/01→01/05						
3.0	160 - 162	06/01→01/05						
3.0 quattro	160 - 162	06/01→01/05						
3.7	191	03/99→01/05						
3.7 quattro	191	03/99→01/05						
AUDI - ALLROAD C5 (4BH) 05/00→08/05								
Accessory Kit, disc brake pad								
2.5 TDI quattro	120 - 132	05/00→08/05	➡	→ 07/05		**13.0460-0516.2**	**610516**	
2.7 T quattro	184	05/00→08/05						
4.2 V8 quattro	220	07/02→08/05						
AUDI - Q2 (GAB, GAG) 06/16→								
Brake Caliper								
1.0 TFSI	85	10/16→	⬅	◪; +PR 1ZA / 1ZD / 1ZK		**24.3571-1801.5**	**241387**	without holder
1.4 TFSI	110	06/16→						
1.6 TDI	85	06/16→10/18	⬅	◩; +PR 1ZA / 1ZD / 1ZK		**24.3571-1802.5**	**241388**	without holder
2.0 TDI	110	09/16→						
2.0 TDI quattro	110 - 140	07/16→						
2.0 TFSI quattro	140	05/17→						
30 TDI	85	07/18→						
30 TFSI	81 - 85	07/18→						
35 TDI	110	09/16→						
35 TDI quattro	110	09/18→						
35 TFSI	110	07/18→						
40 TFSI quattro	140	09/18→						
SQ2 TFSI quattro	221	08/18→						
AUDI - Q3 (F3B) 07/18→								
Brake Caliper								
35 TDI	110	09/18→	⬅	◪; +PR 1ZA / 1ZD / 1ZK / 1ZL		**24.3571-1801.5**	**241387**	without holder
35 TDI quattro	110	09/18→						
35 TFSI	110	08/18→	⬅	◩; +PR 1ZA / 1ZD / 1ZK / 1ZL		**24.3571-1802.5**	**241388**	without holder
35 TFSI Mild Hybrid	110	11/19→						
40 TDI quattro	140	10/18→						
40 TFSI quattro	140	07/18→						
45 TFSI	180	01/21→						
45 TFSI quattro	169	07/18→						
AUDI - Q3 Sportback (F3N) 06/19→								
Brake Caliper								
35 TDI	110	07/19→	⬅	◪; +PR 1ZA / 1ZD / 1ZK / 1ZL		**24.3571-1801.5**	**241387**	without holder
35 TDI quattro	110	09/19→						
35 TFSI	110	09/19→	⬅	◩; +PR 1ZA / 1ZD / 1ZK / 1ZL		**24.3571-1802.5**	**241388**	without holder
35 TFSI Mild Hybrid	110	11/19→						
40 TDI quattro	140 - 147	07/19→						
40 TFSI quattro	140	11/19→						
45 TFSI	180	01/21→						
45 TFSI quattro	169	06/19→						

	kW				! #			
AUDI - Q5 (8RB) 11/08→12/17								
Accessory Kit, disc brake pad								
2.0 Hybrid quattro	180	09/12→05/16	➡	+PR 1KW / 2EK; + eFSB		**13.0460-0517.2**	**610517**	
2.0 TDI	100 - 140	11/10→05/17						
2.0 TDI quattro	100 - 140	08/09→05/17						
2.0 TFSI Hybrid quattro	155	06/11→06/16						
2.0 TFSI quattro	132 - 169	08/09→05/17						
3.0 TDI quattro	190	11/13→05/17						
2.0 TDI quattro	120 - 125	11/08→05/17	➡	03/09→; +PR 1KW / 2EK; + eFSB		**13.0460-0517.2**	**610517**	
2.0 TFSI quattro	155	11/08→09/12						
3.0 TDI quattro	155 - 176	11/08→05/17						
3.2 FSI quattro	199	11/08→12/12						
2.0 TDI quattro	130	06/12→05/17	➡	09/12→; +PR 1KW / 2EK; + eFSB		**13.0460-0517.2**	**610517**	
2.0 TFSI quattro	165	06/12→05/16						
3.0 TDI quattro	180 - 184	06/12→05/17						
3.0 TFSI quattro	200	06/12→05/17						
AUDI - Q5 Van (8RB) 11/08→12/17								
Accessory Kit, disc brake pad								
2.0 TDI	100 - 140	11/11→05/17	➡	+PR 1KW / 2EK; + eFSB		**13.0460-0517.2**	**610517**	
3.0 TDI quattro	190	11/13→05/17						
2.0 TDI quattro	125	11/08→09/12	➡	03/09→; +PR 1KW / 2EK; + eFSB		**13.0460-0517.2**	**610517**	
2.0 TFSI quattro	155	11/08→09/12						
3.0 TDI quattro	176	11/08→04/13						
3.2 FSI quattro	199	11/08→09/12						
2.0 TDI quattro	130	07/12→06/14	➡	09/12→; +PR 1KW / 2EK; + eFSB		**13.0460-0517.2**	**610517**	
3.0 TDI quattro	180	06/12→05/17						
AUDI - TT (FV3, FVP) 07/14→								
Brake Caliper								
1.8 TFSI	132	07/15→08/18	⬅	; +PR 1LJ / 1ZD / 1ZF / 1ZL		**24.3571-1801.5**	**241387**	without holder
2.0 TDI	135	07/14→						
2.0 TDI quattro	135	01/17→	⬅	; +PR 1LJ / 1ZD / 1ZF / 1ZL		**24.3571-1802.5**	**241388**	without holder
2.0 TFSI	169	07/14→						
2.0 TFSI quattro	169	07/14→						
2.0 TTS quattro	210 - 228	11/14→						
2.5 RS quattro	294	10/16→						
40 TFSI	145	07/18→						
45 TFSI	180	07/18→						
45 TFSI quattro	180	07/18→						
TFSi quattro	235	01/21→						
AUDI - TT Roadster (8N9) 10/99→12/06								
Accessory Kit, disc brake pad								
1.8 T	110 - 140	10/99→06/06	➡	8N5-011 001→; +PR 1KE / 1KF / 1KK / 2EH		**13.0460-0516.2**	**610516**	
1.8 T quattro	132 - 165	10/99→06/06						
3.2 VR6 quattro	184	07/03→06/06						
AUDI - TT Roadster (FV9, FVR) 11/14→								
Brake Caliper								
1.8 TFSI	132	07/15→08/18	⬅	; +PR 1LJ / 1ZD / 1ZF / 1ZL		**24.3571-1801.5**	**241387**	without holder
2.0 TDI	135	11/14→						
2.0 TDI quattro	135	01/17→	⬅	; +PR 1LJ / 1ZD / 1ZF / 1ZL		**24.3571-1802.5**	**241388**	without holder
2.0 TFSI	169	11/14→						
2.0 TFSI quattro	169	11/14→						
2.0 TTS quattro	210 - 228	11/14→						
2.5 RS quattro	294	10/16→						
40 TFSI	145	07/18→						
45 TFSI	180	07/18→						
45 TFSI quattro	180	07/18→						
TTS	235	01/21→						
TTS TFSI quattro	235	11/20→						
BMW - 2 Active Tourer (F45) 11/13→								
Brake Caliper								
216 d	85	03/14→	⬅			**24.3541-1861.5**	**241277**	TRW without holder
218 d	100 - 110	11/13→						
↓								

© 2021 Continental Aftermarket & Services GmbH

	kW				! #			
BMW - 2 Active Tourer (F45) 11/13→								
Brake Caliper								
218 d xDrive 218 i	100 - 110 100 - 103	12/14→ 07/14→				**24.3541-1861.5**	**241277**	TRW without holder
Brake Disc								
216 d 218 i	85 100	03/14→ 07/14→02/18		10/14→		**24.0122-0314.1**	**422314**	Ø 294 Brake Disc Thickness [mm] 22 Minimum thickness [mm] 20.4 Vented + S
218 d	100	11/13→		09/14→		**24.0122-0314.1**	**422314**	Ø 294 Brake Disc Thickness [mm] 22 Minimum thickness [mm] 20.4 Vented + S
218 d 218 i	110 103	11/13→ 03/18→				**24.0122-0314.1**	**422314**	Ø 294 Brake Disc Thickness [mm] 22 Minimum thickness [mm] 20.4 Vented + S
218 d xDrive	100 - 110	12/14→		11/15→		**24.0122-0314.1**	**422314**	Ø 294 Brake Disc Thickness [mm] 22 Minimum thickness [mm] 20.4 Vented + S
BMW - 2 Active Tourer Van (F45) 11/13→								
Brake Caliper								
218 i 220 d	103 140	03/18→ 11/14→				**24.3541-1861.5**	**241277**	TRW without holder
Brake Disc								
218 i 220 d	103 140	03/18→ 11/14→				**24.0122-0314.1**	**422314**	Ø 294 Brake Disc Thickness [mm] 22 Minimum thickness [mm] 20.4 Vented + S
BMW - 2 Gran Tourer (F46) 07/14→								
Brake Caliper								
214 d 216 d 216 i	70 85 75 - 80	07/15→02/18 08/14→ 09/14→				**24.3541-1861.5**	**241277**	TRW without holder
Brake Disc								
214 d 216 i	70 80	07/15→02/18 03/18→				**24.0122-0314.1**	**422314**	Ø 294 Brake Disc Thickness [mm] 22 Minimum thickness [mm] 20.4 Vented + S
216 d	85	08/14→		03/15→		**24.0122-0314.1**	**422314**	Ø 294 Brake Disc Thickness [mm] 22 Minimum thickness [mm] 20.4 Vented + S
216 i	75	09/14→02/18		07/15→		**24.0122-0314.1**	**422314**	Ø 294 Brake Disc Thickness [mm] 22 Minimum thickness [mm] 20.4 Vented + S
BMW - 3 (G20, G80) 11/18→								
Warning Contact, brake pad wear								
316 d 316 d Mild-Hybrid 318 d 318 d Mild-Hybrid 318 i 320 d 320 d Mild-Hybrid 320 d Mild-Hybrid xDrive 320 d xDrive 320 e Plug-in-Hybrid ↓	85 - 90 85 - 90 100 - 110 100 - 110 115 120 - 140 120 - 140 120 - 140 120 - 140 120 - 150	03/20→ 08/20→ 03/19→03/20 04/20→ 03/20→ 11/18→02/20 03/20→ 03/20→ 11/18→02/20 07/20→			1	**24.8190-0808.2**	**620808**	

	kW				! #			
BMW - 3 (G20, G80) 11/18→								
Warning Contact, brake pad wear								
320 i	135	03/19→			1	**24.8190-0808.2**	**620808**	
320 i 1.6	125	03/19→						
320 i xDrive	135	07/19→						
330 d	195	03/19→						
330 d Mild-Hybrid	210	11/20→						
330 d Mild-Hybrid xDrive	210	11/20→						
330 d xDrive	195	07/19→						
330 e Plug-in-Hybrid	135 - 215	07/19→						
330 e Plug-in-Hybrid xDrive	135 - 215	07/20→						
330 i	190	11/18→						
330 i xDrive	190	11/18→						
M340 d Mild-Hybrid xDrive	250	04/20→						
M 340 i Mild-Hybrid xDrive	275	11/20→						
M 340 i xDrive	275 - 285	03/19→						
BMW - 3 Touring (G21, G81) 07/19→								
Warning Contact, brake pad wear								
316 d	85 - 90	11/20→			1	**24.8190-0808.2**	**620808**	
316 d Mild-Hybrid	85 - 90	07/20→						
318 d	100 - 110	11/19→07/20						
318 d Mild-Hybrid	100 - 110	08/20→						
318 i	115	03/20→						
320 d	120 - 140	07/19→02/20						
320 d Mild-Hybrid	120 - 140	03/20→						
320 d Mild-Hybrid xDrive	120 - 140	03/20→						
320 d xDrive	120 - 140	07/19→02/20						
320 e Plug-in-Hybrid	120 - 150	07/20→						
320 e Plug-in-Hybrid xDrive	120 - 150	03/21→						
320 i	135	11/19→						
330 d	195	11/19→						
330 d Mild-Hybrid	210	11/20→						
330 d Mild-Hybrid xDrive	210	11/20→						
330 d xDrive	195	07/19→						
330 e Plug-in-Hybrid	135 - 215	07/20→						
330 e Plug-in-Hybrid xDrive	135 - 215	07/20→						
330 i	190	07/19→						
330 i xDrive	190	07/19→						
M 340 d Mild-Hybrid xDrive	250	04/20→						
M 340 i Mild-Hybrid xDrive	275	11/20→						
M 340 i xDrive	275 - 285	11/19→						
BMW - 3 Touring Van (G21) 07/19→								
Warning Contact, brake pad wear								
320 d	140	07/19→02/20			1	**24.8190-0808.2**	**620808**	
320 d Mild-Hybrid	140	03/20→						
320 d Mild-Hybrid xDrive	140	03/20→						
320 d xDrive	140	07/19→02/20						
320 i	135	11/19→						
330 d	195	11/19→						
330 d xDrive	195	11/19→						
330 i	190	07/19→						
M 340 i xDrive	275	11/19→						
BMW - 4 Cabriolet (G23, G83) 11/20→								
Warning Contact, brake pad wear								
420 d Mild-Hybrid	120 - 140	11/20→			1	**24.8190-0808.2**	**620808**	
420 i	135	11/20→						
430 d Mild-Hybrid	210	07/21→						
430 i	190	11/20→						
↓								

© 2021 Continental Aftermarket & Services GmbH

	kW				! #			
BMW - 4 Cabriolet (G23, G83) 11/20→								
Warning Contact, brake pad wear								
M440 d Mild-Hybrid xDrive M 440 i Mild-Hybrid xDrive	250 275 - 285	11/21→ 11/20→	←		1	**24.8190-0808.2**	**620808**	
BMW - 4 Coupe (G22, G82) 07/20→								
Warning Contact, brake pad wear								
420 d Mild-Hybrid 420 d Mild-Hybrid xDrive 420 i 420 i 1.6 430 d Mild-Hybrid xDrive 430 i M4 M440 d Mild-Hybrid xDrive M 440 i Mild-Hybrid xDrive M4 Competition M4 Competition M xDrive	140 120 - 140 135 125 210 190 353 250 285 375 375	07/20→ 07/20→ 07/20→ 11/20→ 03/21→ 07/20→ 11/20→ 05/21→	←		1	**24.8190-0808.2**	**620808**	
BMW - 5 (F10) 01/09→10/16								
Wheel Speed Sensor								
518 d 520 d 520 i 525 d 528 i 530 d 535 d 535 i 550 i ActiveHybrid M5 M5 30th Anniversary	100 - 110 100 - 151 120 - 135 150 - 160 180 - 190 190 220 - 230 240 300 - 330 225 - 250 412 441	07/13→10/16 06/10→10/16 09/11→10/16 03/10→10/16 03/10→10/16 09/11→10/16 09/10→10/16 07/13→10/16 03/10→10/16 12/11→10/16 09/11→10/16 07/14→10/16	←		2	**24.0710-2057.3**	**360578**	L= 988
518 d 520 d	120 155	10/13→10/16 10/13→10/16	←	07/14→	2	**24.0710-2057.3**	**360578**	L= 988
523 i 530 d 535 i	150 - 155 180 225	06/09→08/11 01/10→08/11 01/10→10/16	←	03/10→	2	**24.0710-2057.3**	**360578**	L= 988
530 d 530 d xDrive	210 210	09/10→10/16 03/11→10/16	←	10/15→	2	**24.0710-2057.3**	**360578**	L= 988
530 i	190 - 200	03/10→06/13	←	09/11→	2	**24.0710-2057.3**	**360578**	L= 988
M5 Competition	423	02/13→10/16	←	01/14→	2	**24.0710-2057.3**	**360578**	L= 988
BMW - 5 Gran Turismo (F07) 01/09→02/17								
Wheel Speed Sensor								
520 d 530 d 535 d 550 i	100 - 120 190 220 - 230 330	07/12→02/17 07/12→02/17 03/10→02/17 07/12→02/17	←		2	**24.0710-2057.3**	**360578**	L= 988
520 d	135	04/11→02/17	←	10/11→	2	**24.0710-2057.3**	**360578**	L= 988
528 i	180	07/13→02/17	←	08/13→	2	**24.0710-2057.3**	**360578**	L= 988
530 d	155	09/10→02/17	←	07/10→	2	**24.0710-2057.3**	**360578**	L= 988
530 d 535 i 550 i	180 225 300	08/09→06/12 01/09→02/17 08/09→06/12	←	10/09→	2	**24.0710-2057.3**	**360578**	L= 988
BMW - 5 Touring (F11) 11/09→02/17								
Wheel Speed Sensor								
518 d ↓	100 - 120	07/13→02/17	←		2	**24.0710-2057.3**	**360578**	L= 988

	kW				! #			
BMW - 5 Touring (F11) 11/09→02/17								
Wheel Speed Sensor								
520 d 520 i 525 d 528 i 530 d 535 d 550 i	140 - 155 120 150 - 160 180 190 220 - 230 330	07/14→02/17 09/11→02/17 09/10→02/17 09/11→02/17 09/11→02/17 09/10→02/17 07/13→02/17	←		2	**24.0710-2057.3**	**360578**	L= 988
520 d 523 i 528 i 530 d 535 i	120 - 147 150 190 180 225	06/10→02/17 11/09→08/11 11/09→08/11 06/10→08/11 06/10→02/17	←	09/10→	2	**24.0710-2057.3**	**360578**	L= 988
520 i 530 i 550 i	135 190 - 200 300	10/10→02/17 03/10→06/13 09/10→06/13	←	09/11→	2	**24.0710-2057.3**	**360578**	L= 988
530 d 535 i	210 240	09/11→02/17 07/13→02/17	←	10/15→	2	**24.0710-2057.3**	**360578**	L= 988
BMW - 6 Cabriolet (F12) 12/10→06/18								
Wheel Speed Sensor								
640 d 640 i 650 i	230 235 330	09/11→06/18 09/11→06/18 07/12→06/18	←		2	**24.0710-2057.3**	**360578**	L= 988
650 i	300	12/10→06/12	←	03/11→	2	**24.0710-2057.3**	**360578**	L= 988
M6	412	03/12→06/18	←	06/12→	2	**24.0710-2057.3**	**360578**	L= 988
M6 Competition	423	07/13→02/15	←	02/14→	2	**24.0710-2057.3**	**360578**	L= 988
M6 Competition	441	03/15→06/18	←	07/15→	2	**24.0710-2057.3**	**360578**	L= 988
BMW - 6 Coupe (F13) 07/11→10/17								
Wheel Speed Sensor								
640 d 640 i 650 i M6	230 235 300 412	09/11→10/17 07/11→10/17 07/11→06/12 07/12→10/17	←		2	**24.0710-2057.3**	**360578**	L= 988
650 i	330	07/12→10/17	←	09/12→	2	**24.0710-2057.3**	**360578**	L= 988
M6 Competition	423	07/13→02/15	←	02/14→	2	**24.0710-2057.3**	**360578**	L= 988
M6 Competition	441	03/15→10/17	←	07/15→	2	**24.0710-2057.3**	**360578**	L= 988
BMW - 6 Gran Coupe (F06) 03/12→10/18								
Wheel Speed Sensor								
640 d 640 i 650 i M6	230 235 330 412	03/12→10/18 03/12→10/18 07/12→10/18 03/13→10/18	←		2	**24.0710-2057.3**	**360578**	L= 988
M6 Competition	423	07/13→02/15	←	02/14→	2	**24.0710-2057.3**	**360578**	L= 988
M6 Competition	441	03/15→10/18	←	07/15→	2	**24.0710-2057.3**	**360578**	L= 988
BMW - 7 (E65, E66, E67) 07/01→12/09								
Wheel Speed Sensor								
730 d Li 735 i 740 d 745 i 760 i	150 - 160 200 - 327 200 190 245 327	06/02→02/05 07/01→08/08 11/01→02/05 10/02→02/05 07/01→03/05 01/03→08/08	→	03/03→	2	**24.0710-2079.3**	**360600**	L= 1,020
730 d 730 i Li 730 Ld 740 i 745 d 750 i	155 170 170 - 270 170 225 220 - 242 270	09/03→08/08 03/03→07/08 03/03→08/08 07/05→08/08 03/05→08/08 03/05→07/08 03/05→08/08	→		2	**24.0710-2079.3**	**360600**	L= 1,020
730 i Li	190 190	03/05→08/08 03/05→08/08	→	07/05→	2	**24.0710-2079.3**	**360600**	L= 1,020

© 2021 Continental Aftermarket & Services GmbH

	kW				! #			
BMW - 7 (F01, F02, F03, F04) 02/08→12/15								
Wheel Speed Sensor								
730 d	155	02/08→05/15	←	09/08→	2	**24.0710-2057.3**	**360578**	L= 988
730 d 730 i Li 740 d 740 i 750 i 760 i ActiveHybrid 7	180 - 190 190 190 - 400 225 - 230 235 - 240 300 - 330 400 235 - 260	09/08→05/15 09/09→06/15 09/08→12/15 09/09→06/15 09/08→12/15 09/08→06/15 09/09→12/15 08/12→06/15	←		2	**24.0710-2057.3**	**360578**	L= 988
BMW - X2 (F39) 11/17→								
Brake Caliper								
sDrive 16 d	85	11/18→	←	; for vehicles without M-sport brakes		**24.3541-1861.5**	**241277**	TRW without holder
Brake Disc								
sDrive 16 d	85	11/18→	←	for vehicles without M-sport brakes		**24.0122-0314.1**	**422314**	Ø 294 Brake Disc Thickness [mm] 22 Minimum thickness [mm] 20.4 Vented + S
BMW - X4 (G02, F98) 04/18→								
Warning Contact, brake pad wear								
xDrive 20 d xDrive 20 i xDrive 25 d xDrive 30 d xDrive 30 i	120 - 140 135 155 - 170 183 - 195 183 - 185	04/18→03/20 04/18→ 04/18→ 04/18→06/20 04/18→	→		1	**24.8190-0826.2**	**620826**	
BMW - X5 (G05, F95) 08/18→								
Warning Contact, brake pad wear								
M M50 i xDrive	441 390	12/19→ 08/19→	←		1	**24.8190-0824.2**	**620824**	
M Competition xDrive 25 d xDrive 30 d xDrive 30 d Mild-Hybrid xDrive 40 d Mild-Hybrid xDrive 40 i xDrive 40 i Mild-Hybrid xDrive 45 e Plug-in-Hybrid xDrive 50 i xDrive M 50 d	460 155 - 170 183 - 195 183 - 210 250 250 245 155 - 290 340 294	12/19→ 08/19→ 08/18→07/20 08/20→ 05/20→ 08/18→ 12/20→ 06/19→ 08/18→ 08/18→	→		1	**24.8190-0825.2**	**620825**	
BMW - X5 Van (G05) 11/19→								
Warning Contact, brake pad wear								
xDrive 30 d	195	11/19→	←		1	**24.8190-0824.2**	**620824**	
xDrive 40 i	250	11/19→	→		1	**24.8190-0825.2**	**620825**	
BMW - X6 (G06, F96) 08/19→								
Warning Contact, brake pad wear								
M M50 i xDrive	441 390	12/19→ 08/19→	←		1	**24.8190-0824.2**	**620824**	
M Competition xDrive 30 d Mild-Hybrid xDrive 40 d Mild-Hybrid xDrive 40 i xDrive 40 i Mild-Hybrid xDrive M 50 d	460 155 - 210 250 250 245 294	12/19→ 08/20→ 05/20→ 08/19→ 12/20→ 08/19→	→		1	**24.8190-0825.2**	**620825**	
xDrive 30 d	155 - 195	08/19→07/20	←		1	**24.8190-0824.2**	**620824**	
			→		1	**24.8190-0825.2**	**620825**	

	kW				! #			
BMW - X7 (G07) 03/19→								
Warning Contact, brake pad wear								
xDrive 30 d	155 - 183	03/19→	←		1	**24.8190-0824.2**	**620824**	
			→	for vehicles with towbar	1	**24.8190-0825.2**	**620825**	
xDrive 30 d xDrive 40 d Mild-Hybrid xDrive 40 i xDrive 40 i Mild-Hybrid xDrive M 50 d xDrive M 50 i	195 155 - 250 250 245 294 390	03/19→ 03/19→ 03/19→ 12/20→ 03/19→ 07/19→	←		1	**24.8190-0824.2**	**620824**	
			→		1	**24.8190-0825.2**	**620825**	
CITROËN - JUMPER Bus 04/06→								
Brake Caliper								
2.0 BlueHDi 110 2.0 BlueHDi 130 2.0 BlueHDi 160 2.2 BlueHDi 120 2.2 BlueHDi 140 2.2 BlueHDi 165	81 96 120 88 103 121	07/15→09/19 07/15→09/19 07/15→09/19 08/19→ 08/19→ 08/19→	←	; Payload to [kg] 1,200; Payload code: 12Q		**24.3441-1705.5**	**241367**	BRE without holder
2.2 HDi 100 2.2 HDi 120 3.0 HDi 155 3.0 HDi 160	74 88 115 116	04/06→ 04/06→ 07/10→ 09/06→	←	; Payload [kg]: 1,400; not for facelift; Payload code: 14Q		**24.3441-1705.5**	**241367**	BRE without holder
			←	; Payload to [kg] 1,200; Payload code: 12Q		**24.3441-1705.5**	**241367**	BRE without holder
			←	; → 02/11; Payload from [kg] 1,200 Payload to [kg] 1,400; Payload code: 12Q / 14Q		**24.3441-1706.5**	**241368**	BRE without holder
2.2 HDi 110 2.2 HDi 130 2.2 HDi 150 3.0 HDi 180	81 96 110 130	07/11→ 07/11→ 07/11→ 07/11→	←	; Payload [kg]: 1,400; not for facelift; Payload code: 14Q		**24.3441-1705.5**	**241367**	BRE without holder
			←	; Payload to [kg] 1,200; Payload code: 12Q		**24.3441-1705.5**	**241367**	BRE without holder
CITROËN - JUMPER Kasten 04/06→								
Brake Caliper								
2.0 BlueHDi 110 2.0 BlueHDi 130 2.0 BlueHDi 130 4x4 2.0 BlueHDi 160 2.0 BlueHDi 160 4x4 2.2 BlueHDi 120 2.2 BlueHDi 140 2.2 BlueHDi 165	81 96 96 120 120 88 103 121	04/16→09/19 04/16→09/19 04/16→09/19 04/16→09/19 04/16→09/19 08/19→ 08/19→ 08/19→	←	; Payload to [kg] 1,200; Payload code: 12Q		**24.3441-1705.5**	**241367**	BRE without holder
2.2 HDi 100	74	04/06→12/12	←	; → 02/11; Payload from [kg] 1,200 Payload to [kg] 1,400; Payload code: 12Q / 14Q		**24.3441-1705.5**	**241367**	BRE without holder
			←	; 03/11→; Payload from [kg] 1,200 Payload to [kg] 1,400; Payload code: 12Q / 14Q		**24.3441-1705.5**	**241367**	BRE without holder
			←	; → 02/11; Payload from [kg] 1,200 Payload to [kg] 1,400; Payload code: 12Q / 14Q		**24.3441-1706.5**	**241368**	BRE without holder
2.2 HDi 110 2.2 HDi 130 2.2 HDi 130 4x4 2.2 HDi 150 3.0 HDi 180	81 96 96 110 130	07/11→ 07/11→ 01/12→05/16 07/11→ 07/11→	←	; Payload [kg]: 1,400; not for facelift; Payload code: 14Q		**24.3441-1705.5**	**241367**	BRE without holder
			←	; Payload to [kg] 1,200; Payload code: 12Q		**24.3441-1705.5**	**241367**	BRE without holder
2.2 HDi 120 3.0 HDi 145 3.0 HDi 155 3.0 HDi 160	88 107 115 116	04/06→ 07/10→ 07/10→ 09/06→	←	; Payload [kg]: 1,400; not for facelift; Payload code: 14Q		**24.3441-1705.5**	**241367**	BRE without holder
			←	; Payload to [kg] 1,200; Payload code: 12Q		**24.3441-1705.5**	**241367**	BRE without holder
			←	; → 02/11; Payload from [kg] 1,200 Payload to [kg] 1,400; Payload code: 12Q / 14Q		**24.3441-1706.5**	**241368**	BRE without holder
CITROËN - JUMPER Pritsche/Fahrgestell 04/06→								
Brake Caliper								
2.0 BlueHDi 110 2.0 BlueHDi 130 2.0 BlueHDi 130 4x4 2.0 BlueHDi 160 2.0 BlueHDi 160 4x4 2.2 BlueHDi 120 2.2 BlueHDi 140 2.2 BlueHDi 165	81 96 96 120 120 88 103 121	04/16→09/19 04/16→09/19 04/16→09/19 04/16→09/19 04/16→09/19 08/19→ 08/19→ 08/19→	←	; Payload to [kg] 1,200; Payload code: 12Q		**24.3441-1705.5**	**241367**	BRE without holder
2.2 HDi 100 2.2 HDi 120 3.0 HDi 145 ↓	74 88 107	04/06→ 04/06→ 07/10→	←	; Payload [kg]: 1,400; not for facelift; Payload code: 14Q		**24.3441-1705.5**	**241367**	BRE without holder

© 2021 Continental Aftermarket & Services GmbH

	kW				! #			
CITROËN - JUMPER Pritsche/Fahrgestell 04/06→								
Brake Caliper								
3.0 HDi 160	116	09/06→	←	; Payload to [kg] 1,200; Payload code: 12Q		**24.3441-1705.5**	**241367**	BRE without holder
			←	; → 02/11; Payload from [kg] 1,200 Payload to [kg] 1,400; Payload code: 12Q / 14Q		**24.3441-1706.5**	**241368**	BRE without holder
2.2 HDi 110 2.2 HDi 130 2.2 HDi 150 3.0 HDi 180	81 96 110 130	07/11→ 07/11→ 07/11→ 07/11→	←	; Payload [kg]: 1,400; not for facelift; Payload code: 14Q		**24.3441-1705.5**	**241367**	BRE without holder
			←	; Payload to [kg] 1,200; Payload code: 12Q		**24.3441-1705.5**	**241367**	BRE without holder
CUPRA - FORMENTOR (KM7) 07/20→								
Brake Caliper								
1.4 e-HYBRID	150 - 180	01/21→	←	; +PR 1ZK		**24.3571-1801.5**	**241387**	without holder
1.5 TSI 2.0 TDI 2.0 TDI 4Drive 2.0 TSI 2.0 TSI 4Drive	110 110 110 180 140 - 228	11/20→ 03/21→ 03/21→ 03/21→ 07/20→	←	; +PR 1ZK		**24.3571-1802.5**	**241388**	without holder
CUPRA - LEON (KL1) 10/20→								
Brake Caliper								
e-HYBRID	110 - 180	10/20→	←	; +PR 1ZK		**24.3571-1801.5**	**241387**	without holder
			←	; +PR 1ZK		**24.3571-1802.5**	**241388**	without holder
CUPRA - LEON Sportstourer (KL8) 10/20→								
Brake Caliper								
e-HYBRID	110 - 180	10/20→	←	; +PR 1ZK		**24.3571-1801.5**	**241387**	without holder
			←	; +PR 1ZK		**24.3571-1802.5**	**241388**	without holder
FIAT - DOBLO Cargo (263_) 02/10→								
Brake Master Cylinder								
1.3 D Multijet 1.4 1.4 Natural Power 1.6 D Multijet 2.0 D Multijet	55 - 70 70 - 88 88 66 - 88 99	02/10→ 02/10→ 06/10→ 02/10→ 02/10→		for right-hand drive vehicles; + ESP		**24.4123-1731.3**	**011094**	Ø 23.8 without brake fluid reservoir
FIAT - DOBLO Kombi (263_) 11/09→								
Brake Master Cylinder								
1.3 D Multijet 1.4 1.4 Natural Power 1.6 D Multijet	66 - 70 70 - 88 88 66 - 88	02/10→ 02/10→ 02/10→ 02/10→		for right-hand drive vehicles; + ESP		**24.4123-1731.3**	**011094**	Ø 23.8 without brake fluid reservoir
1.6 D Multijet 2.0 D Multijet	77 99	01/10→ 01/10→		02/10→; for right-hand drive vehicles; + ESP		**24.4123-1731.3**	**011094**	Ø 23.8 without brake fluid reservoir
FIAT - DOBLO Pritsche/Fahrgestell (263_) 02/10→								
Brake Master Cylinder								
1.3 D Multijet 1.4 1.4 Natural Power 1.6 D Multijet 2.0 D Multijet	55 - 70 70 - 88 88 66 - 88 99	02/10→ 04/10→ 06/10→ 02/10→ 02/10→		for right-hand drive vehicles; + ESP		**24.4123-1731.3**	**011094**	Ø 23.8 without brake fluid reservoir
FIAT - DUCATO Bus (250_) 07/06→								
Brake Caliper								
100 Multijet 2 2 D ↓	74 74	07/06→05/11 07/06→05/11	←	; Type: 30,33; Payload from [kg] 1,100 Payload to [kg] 1,500; Payload code: 11Q / 15Q		**24.3441-1705.5**	**241367**	BRE without holder

	kW				! #			
FIAT - DUCATO Bus (250_) 07/06→								
Brake Caliper								
100 Multijet 2 2 D	74 74	07/06→05/11 07/06→05/11	←	; → 02/11; Type: 33; Payload from [kg] 1,100 Payload to [kg] 1,500; Payload code: 11Q / 15Q		**24.3441-1705.5**	**241367**	BRE without holder
			←	; → 02/11; Type: 33; Payload from [kg] 1,100 Payload to [kg] 1,500; Payload code: 11Q / 15Q		**24.3441-1706.5**	**241368**	BRE without holder
3 D 110 Multijet 2 115 Multijet 2 0 D	82 - 83 82 - 83 85 85	10/11→ 10/11→ 06/11→ 06/11→	←	; Type: 28,30,33; Payload from [kg] 1,100 / 1,500; Payload code: 11Q / 15Q		**24.3441-1705.5**	**241367**	BRE without holder
3 D 120 Multijet 2	88 88	07/06→ 07/06→	←	; Type: 30,33; Payload from [kg] 1,100 Payload to [kg] 1,500; Payload code: 11Q / 15Q		**24.3441-1705.5**	**241367**	BRE without holder
			←	; → 02/11; Type: 30,33; Payload from [kg] 1,100 Payload to [kg] 1,500; Payload code: 11Q / 15Q		**24.3441-1705.5**	**241367**	BRE without holder
			←	; → 02/11; Type: 30,33; Payload from [kg] 1,100 Payload to [kg] 1,500; Payload code: 11Q / 15Q		**24.3441-1706.5**	**241368**	BRE without holder
3 D 130 Multijet 2 3 D 4x4 140 Multijet 2 150 Multijet 2 160 Multijet 2 180 Multijet 2	96 - 130 96 96 - 110 103 109 - 110 118 130	06/11→ 06/11→ 06/11→ 05/19→ 06/11→ 05/19→ 05/19→	←	; Type: 30,33; Payload from [kg] 1,100 Payload to [kg] 1,500; Payload code: 11Q / 15Q		**24.3441-1705.5**	**241367**	BRE without holder
140 Natural Power	100	04/09→	←	; → 02/11; Payload from [kg] 1,100 Payload to [kg] 1,500; Payload code: 11Q / 15Q		**24.3441-1705.5**	**241367**	BRE without holder
			←	; Payload from [kg] 1,100 Payload to [kg] 1,500; Payload code: 11Q / 15Q		**24.3441-1705.5**	**241367**	BRE without holder
			←	; → 02/11; Payload from [kg] 1,100 Payload to [kg] 1,500; Payload code: 11Q / 15Q		**24.3441-1706.5**	**241368**	BRE without holder
150 Multijet 3 0 D	107 107	04/10→ 04/10→	←	; Type: 30,33,35,40; Payload from [kg] 1,100 Payload to [kg] 1,500; Payload code: 11Q / 15Q		**24.3441-1705.5**	**241367**	BRE without holder
			←	; → 02/11; Type: 30,33,35,40; Payload from [kg] 1,100 Payload to [kg] 1,500; Payload code: 11Q / 15Q		**24.3441-1705.5**	**241367**	BRE without holder
			←	; → 02/11; Type: 30,33,35,40; Payload from [kg] 1,100 Payload to [kg] 1,500; Payload code: 11Q / 15Q		**24.3441-1706.5**	**241368**	BRE without holder
160 Multijet 3 0 D	115 - 116 115 - 116	07/06→ 07/06→	←	; Type: 33; Payload from [kg] 1,100 Payload to [kg] 1,500; Payload code: 11Q / 15Q		**24.3441-1705.5**	**241367**	BRE without holder
			←	; → 02/11; Type: 33; Payload from [kg] 1,100 Payload to [kg] 1,500; Payload code: 11Q / 15Q		**24.3441-1705.5**	**241367**	BRE without holder
			←	; → 02/11; Type: 33; Payload from [kg] 1,100 Payload to [kg] 1,500; Payload code: 11Q / 15Q		**24.3441-1706.5**	**241368**	BRE without holder
0 D 180 Multijet 3	130 130	06/11→ 06/11→	←	; Type: 30,33,35; Payload from [kg] 1,100 Payload to [kg] 1,500; Payload code: 11Q / 15Q		**24.3441-1705.5**	**241367**	BRE without holder
FIAT - DUCATO Kasten (250_) 07/06→								
Brake Caliper								
100 Multijet 2 2 D	74 74	07/06→ 07/06→	←	; Type: 30,33; Payload from [kg] 1,100 Payload to [kg] 1,500; Payload code: 11Q / 15Q		**24.3441-1705.5**	**241367**	BRE without holder
			←	; → 02/11; Type: 33; Payload from [kg] 1,100 Payload to [kg] 1,500; Payload code: 11Q / 15Q		**24.3441-1705.5**	**241367**	BRE without holder
			←	; → 02/11; Type: 33; Payload from [kg] 1,100 Payload to [kg] 1,500; Payload code: 11Q / 15Q		**24.3441-1706.5**	**241368**	BRE without holder
3 D 110 Multijet 2 130 Multijet 2 ↓	82 - 118 82 96	06/11→ 05/14→ 06/11→	←	; Type: 30,33; Payload from [kg] 1,100 Payload to [kg] 1,500; Payload code: 11Q / 15Q		**24.3441-1705.5**	**241367**	BRE without holder

© 2021 Continental Aftermarket & Services GmbH

	kW				! #			
FIAT - DUCATO Kasten (250_) 07/06→								
Brake Caliper								
3 D 4x4 140 Multijet 2 150 Multijet 2 160 Multijet 2 EDUCATO	96 - 110 103 109 - 110 118 90	06/11→ 05/19→ 06/11→ 05/19→ 12/20→	←	; Type: 30,33; Payload from [kg] 1,100 Payload to [kg] 1,500; Payload code: 11Q / 15Q		**24.3441-1705.5**	**241367**	BRE without holder
3 D 110 Multijet 2 115 Multijet 2 0 D	83 83 85 85	10/11→ 10/11→ 06/11→ 06/11→	←	; Type: 28,30,33; Payload from [kg] 1,100 / 1,500; Payload code: 11Q / 15Q		**24.3441-1705.5**	**241367**	BRE without holder
3 D 120 Multijet 2 3 D 4x4	88 88 88	07/06→ 07/06→ 03/10→	←	; Type: 30,33; Payload from [kg] 1,100 Payload to [kg] 1,500; Payload code: 11Q / 15Q		**24.3441-1705.5**	**241367**	BRE without holder
			←	; → 02/11; Type: 30,33; Payload from [kg] 1,100 Payload to [kg] 1,500; Payload code: 11Q / 15Q		**24.3441-1705.5**	**241367**	BRE without holder
			←	; → 02/11; Type: 30,33; Payload from [kg] 1,100 Payload to [kg] 1,500; Payload code: 11Q / 15Q		**24.3441-1706.5**	**241368**	BRE without holder
140 Natural Power	100	04/09→	←	; → 02/11; Payload from [kg] 1,100 Payload to [kg] 1,500; Payload code: 11Q / 15Q		**24.3441-1705.5**	**241367**	BRE without holder
			←	; Payload from [kg] 1,100 Payload to [kg] 1,500; Payload code: 11Q / 15Q		**24.3441-1705.5**	**241367**	BRE without holder
			←	; → 02/11; Payload from [kg] 1,100 Payload to [kg] 1,500; Payload code: 11Q / 15Q		**24.3441-1706.5**	**241368**	BRE without holder
150 Multijet 3 0 D	107 107	04/10→ 04/10→	←	; Type: 30,33,35,40; Payload from [kg] 1,100 Payload to [kg] 1,500; Payload code: 11Q / 15Q		**24.3441-1705.5**	**241367**	BRE without holder
			←	; → 02/11; Type: 30,33,35,40; Payload from [kg] 1,100 Payload to [kg] 1,500; Payload code: 11Q / 15Q		**24.3441-1705.5**	**241367**	BRE without holder
			←	; → 02/11; Type: 30,33,35,40; Payload from [kg] 1,100 Payload to [kg] 1,500; Payload code: 11Q / 15Q		**24.3441-1706.5**	**241368**	BRE without holder
160 Multijet 3 0 D	115 - 116 115 - 116	07/06→ 07/06→	←	; Type: 33; Payload from [kg] 1,100 Payload to [kg] 1,500; Payload code: 11Q / 15Q		**24.3441-1705.5**	**241367**	BRE without holder
			←	; → 02/11; Type: 33; Payload from [kg] 1,100 Payload to [kg] 1,500; Payload code: 11Q / 15Q		**24.3441-1705.5**	**241367**	BRE without holder
			←	; → 02/11; Type: 33; Payload from [kg] 1,100 Payload to [kg] 1,500; Payload code: 11Q / 15Q		**24.3441-1706.5**	**241368**	BRE without holder
3 D 180 Multijet 2	130 130	12/15→ 12/15→	←	; Type: 30,33; Payload from [kg] 1,100 / 1,500; Payload code: 11Q / 15Q		**24.3441-1705.5**	**241367**	BRE without holder
0 D 180 Multijet 3	130 130	06/11→ 06/11→	←	; Type: 30,33,35; Payload from [kg] 1,100 Payload to [kg] 1,500; Payload code: 11Q / 15Q		**24.3441-1705.5**	**241367**	BRE without holder
FIAT - DUCATO Pritsche/Fahrgestell (250_) 07/06→								
Brake Caliper								
100 Multijet 2 2 D	74 74	07/06→ 07/06→	←	; Type: 30,33; Payload from [kg] 1,100 Payload to [kg] 1,500; Payload code: 11Q / 15Q		**24.3441-1705.5**	**241367**	BRE without holder
			←	; → 02/11; Type: 33; Payload from [kg] 1,100 Payload to [kg] 1,500; Payload code: 11Q / 15Q		**24.3441-1705.5**	**241367**	BRE without holder
			←	; → 02/11; Type: 33; Payload from [kg] 1,100 Payload to [kg] 1,500; Payload code: 11Q / 15Q		**24.3441-1706.5**	**241368**	BRE without holder
3 D 110 Multijet 2 115 Multijet 2 0 D	82 - 83 82 - 83 85 85	08/06→ 08/06→ 06/11→ 06/11→	←	; Type: 28,30,33; Payload from [kg] 1,100 / 1,500; Payload code: 11Q / 15Q		**24.3441-1705.5**	**241367**	BRE without holder
3 D 120 Multijet 2 3 D 4x4 130 Multijet 2 ↓	88 - 96 88 88 96	07/06→ 07/06→ 03/10→ 07/06→	←	; Type: 30,33; Payload from [kg] 1,100 Payload to [kg] 1,500; Payload code: 11Q / 15Q		**24.3441-1705.5**	**241367**	BRE without holder
			←	; → 02/11; Type: 30,33; Payload from [kg] 1,100 Payload to [kg] 1,500; Payload code: 11Q / 15Q		**24.3441-1705.5**	**241367**	BRE without holder

	kW				! #			
FIAT - DUCATO Pritsche/Fahrgestell (250_) 07/06→								
Brake Caliper								
3 D 120 Multijet 2 3 D 4x4 130 Multijet 2	88 - 96 88 88 96	07/06→ 07/06→ 03/10→ 07/06→	←	; → 02/11; Type: 30,33; Payload from [kg] 1,100 Payload to [kg] 1,500; Payload code: 11Q / 15Q		**24.3441-1706.5**	**241368**	BRE without holder
140 Multijet 2 3 D 160 Multijet 2 180 Multijet 2	103 103 - 130 118 130	05/19→ 12/15→ 05/19→ 12/15→	←	; Type: 30,33; Payload from [kg] 1,100 / 1,500; Payload code: 11Q / 15Q		**24.3441-1705.5**	**241367**	BRE without holder
140 Natural Power	100	04/09→	←	; → 02/11; Payload from [kg] 1,100 Payload to [kg] 1,500; Payload code: 11Q / 15Q		**24.3441-1705.5**	**241367**	BRE without holder
			←	; Payload from [kg] 1,100 Payload to [kg] 1,500; Payload code: 11Q / 15Q		**24.3441-1705.5**	**241367**	BRE without holder
			←	; → 02/11; Payload from [kg] 1,100 Payload to [kg] 1,500; Payload code: 11Q / 15Q		**24.3441-1706.5**	**241368**	BRE without holder
150 Multijet 2 3 D	109 - 110 109 - 110	06/11→ 06/11→	←	; Type: 30,33; Payload from [kg] 1,100 Payload to [kg] 1,500; Payload code: 11Q / 15Q		**24.3441-1705.5**	**241367**	BRE without holder
150 Multijet 3 0 D	107 107	04/10→ 04/10→	←	; Type: 30,33,35,40; Payload from [kg] 1,100 Payload to [kg] 1,500; Payload code: 11Q / 15Q		**24.3441-1705.5**	**241367**	BRE without holder
			←	; → 02/11; Type: 30,33,35,40; Payload from [kg] 1,100 Payload to [kg] 1,500; Payload code: 11Q / 15Q		**24.3441-1705.5**	**241367**	BRE without holder
			←	; → 02/11; Type: 30,33,35,40; Payload from [kg] 1,100 Payload to [kg] 1,500; Payload code: 11Q / 15Q		**24.3441-1706.5**	**241368**	BRE without holder
160 Multijet 3 0 D	115 - 116 115 - 116	07/06→ 07/06→	←	; Type: 33; Payload from [kg] 1,100 Payload to [kg] 1,500; Payload code: 11Q / 15Q		**24.3441-1705.5**	**241367**	BRE without holder
			←	; → 02/11; Type: 33; Payload from [kg] 1,100 Payload to [kg] 1,500; Payload code: 11Q / 15Q		**24.3441-1705.5**	**241367**	BRE without holder
			←	; → 02/11; Type: 33; Payload from [kg] 1,100 Payload to [kg] 1,500; Payload code: 11Q / 15Q		**24.3441-1706.5**	**241368**	BRE without holder
0 D 180 Multijet 3	130 130	06/11→ 06/11→	←	; Type: 30,33,35; Payload from [kg] 1,100 Payload to [kg] 1,500; Payload code: 11Q / 15Q		**24.3441-1705.5**	**241367**	BRE without holder
FIAT - FULLBACK Pick-up (502_, 503_) 01/16→								
Accessory Kit, brake shoes								
2.4 D 4x4	113 - 133	04/16→	→			**03.0137-9346.2**	**669346**	
FORD - RANGER (ET) 01/05→07/12								
Brake Caliper								
2.5 TDCi 4x4 3.0 TDCi 4x4	105 115	05/06→07/12 05/06→07/12	←			**24.3431-1719.5**	**241377**	without holder
			←			**24.3431-1720.5**	**241378**	without holder
2.5 TDdi	105	05/06→07/12	←	; + High Rider		**24.3431-1719.5**	**241377**	without holder
			←	; + High Rider		**24.3431-1720.5**	**241378**	without holder
3.0 TDCi	115	05/06→07/12	←	; 04/10→; + High Rider; → 10/11		**24.3431-1719.5**	**241377**	without holder
			←	; 04/10→; + High Rider; → 10/11		**24.3431-1720.5**	**241378**	without holder
HONDA - CIVIC VII Coupe (EM2) 02/01→12/05								
Brake Caliper								
1.6 i	81	02/01→12/05	←			**24.3541-1825.5**	**241137**	TRW without holder
HONDA - CIVIC VII Hatchback (EU, EP, EV) 02/01→02/06								
Brake Caliper								
1.4 iS 1.6 i 1.7 CTDi	66 81 74	02/01→09/05 02/01→09/05 01/02→09/05	←			**24.3541-1825.5**	**241137**	TRW without holder

© 2021 Continental Aftermarket & Services GmbH

	kW				! #		
INFINITI - FX 07/08→							
Accessory Kit, parking brake shoes							
30d AWD 37 AWD 50 AWD	175 235 287 - 309	04/10→ 10/08→ 10/08→				**03.0137-9343.2** **669343**	
INFINITI - M (Y51) 03/10→							
Accessory Kit, parking brake shoes							
30d 35h 37	175 225 235	03/10→ 04/11→ 03/10→				**03.0137-9343.2** **669343**	
INFINITI - M35 01/05→							
Accessory Kit, parking brake shoes							
3.5 h	268	01/10→				**03.0137-9343.2** **669343**	
INFINITI - Q50 04/13→							
Accessory Kit, parking brake shoes							
50 Red	298	09/15→				**03.0137-9343.2** **669343**	
INFINITI - Q60 Coupe 09/16→							
Accessory Kit, parking brake shoes							
2.0 T 3.0 T AWD	155 298	09/16→ 09/16→				**03.0137-9343.2** **669343**	
INFINITI - Q70 (Y51) 03/13→							
Accessory Kit, parking brake shoes							
2.2 D 3.0 3.5 Hybrid 3.7	125 175 225 235	10/14→ 03/13→ 03/13→ 03/13→				**03.0137-9343.2** **669343**	
INFINITI - QX70 08/13→							
Accessory Kit, parking brake shoes							
3.7 AWD 30d AWD 37 AWD 50 AWD	235 175 245 287	08/13→ 08/13→ 02/14→ 08/13→				**03.0137-9343.2** **669343**	
IVECO - DAILY II Kasten 01/89→08/09							
Accessory Kit, parking brake shoes							
35-10 35-12 49-12 V	76 - 80 85 85	01/89→08/98 01/90→04/96 06/90→04/96	➡	01/96→		**03.0137-9344.2** **669344**	
35-10 49-12 V	76 90	01/96→05/99 05/96→05/99	➡	→ 04/99		**03.0137-9344.2** **669344**	
IVECO - DAILY II Kipper 01/89→05/99							
Accessory Kit, parking brake shoes							
35-12 K	90	09/96→08/98	➡			**03.0137-9344.2** **669344**	
IVECO - DAILY II Pritsche/Fahrgestell 01/89→05/99							
Accessory Kit, parking brake shoes							
35-10 35-12 49-12	76 - 80 85 85	01/89→12/96 01/90→04/96 06/90→04/96	➡	01/96→		**03.0137-9344.2** **669344**	
35-10 35-12 49-12	76 90 90	01/96→05/99 05/96→05/99 05/96→05/99	➡	→ 04/99		**03.0137-9344.2** **669344**	
IVECO - DAILY III Kasten 11/97→10/09							
Accessory Kit, parking brake shoes							
29 L 10 V 29 L 11 V 29 L 12 V 29 L 13 29 L 9 V 35 C 12 V 35 S 12 V 50 C 11 50 C 13	70 78 85 92 62 85 85 78 92	09/02→07/07 05/99→07/07 09/02→07/07 05/01→07/07 05/99→07/07 09/02→07/07 09/02→07/07 05/99→07/07 05/99→07/07	➡	→ 04/06		**03.0137-9344.2** **669344**	
↓							

	kW				! #			
IVECO - DAILY III Kasten 11/97→10/09								
Accessory Kit, parking brake shoes								
29 L 14	100	01/05→04/06	➡			**03.0137-9344.2**	**669344**	
29 L 9 V	66	11/01→04/06						
35 C 14	100	09/04→04/06						
35 S 14	100	01/05→04/06						
35 C 17	122	01/05→04/06						
35 S 17	122	01/05→04/06						
50 C 14	100	09/04→04/06						
50 C 15	107	01/01→04/06						
50 C 17	122	09/04→04/06						
IVECO - DAILY III Pritsche/Fahrgestell 03/98→10/09								
Accessory Kit, parking brake shoes								
29 L 10	70	09/02→04/06	➡			**03.0137-9344.2**	**669344**	
29 L 11	78	05/99→04/06						
29 L 12	85	09/02→04/06						
29 L 13	92	11/01→04/06						
29 L 14	100	11/05→04/06						
29 L 9	62 - 66	05/99→04/06						
35 C 10 V	70	09/02→04/06						
35 S 10 V	70	09/02→04/06						
35 S 12	85	09/02→04/06						
35 C 12	85	09/02→04/06						
35 C 14	100	09/04→04/06						
35 S 14	100	01/05→04/06						
35 C 15	107	11/01→04/06						
35 C 17	122	01/05→04/06						
35 S 17	122	01/05→04/06						
35 S 9	66	11/01→04/06						
35 C 9	66	11/01→04/06						
50 C 11	78	05/99→04/06						
50 C 13	92	05/99→04/06						
50 C 14	100	09/04→04/06						
50 C 15	107	01/01→04/06						
50 C 17	122	09/04→04/06						
IVECO - DAILY IV Pritsche/Fahrgestell 05/06→03/12								
Accessory Kit, parking brake shoes								
50C18	130	05/06→08/11	➡	→ 12947747		**03.0137-9344.2**	**669344**	
JEEP - RENEGADE SUV (BU, B1) 07/14→								
Brake Master Cylinder								
1.0 T-GDi	88	08/18→		for right-hand drive vehicles		**24.4123-1731.3**	**011094**	Ø 23.8 without brake fluid reservoir
1.3 1.3 PHEV 4Xe	133 - 177	08/20→						
1.3 PHEV 4Xe	96 - 140	08/20→						
1.3 T-GDi	110	08/18→						
1.3 T-GDi 4x4	132	08/18→						
1.4	100 - 103	07/14→						
1.4 4x4	125	07/14→						
1.6	81	07/14→						
1.6 CRD	70 - 88	07/14→						
1.6 MultiJet	96	02/20→						
2.0 CRD 4x4	88 - 125	07/14→						
JEEP - RENEGADE VAN (BU, B1) 07/14→								
Brake Master Cylinder								
1.4	103	07/14→		for right-hand drive vehicles		**24.4123-1731.3**	**011094**	Ø 23.8 without brake fluid reservoir
1.4 4x4	125	07/14→						
1.6 E-torQ	81	07/14→						
LAND ROVER - FREELANDER 2 (L359) 10/06→12/15								
Accessory Kit, parking brake shoes								
2.0 Si4 4x4	177	10/11→10/14	➡			**03.0137-9350.2**	**669350**	
2.2 eD4	110	08/10→10/14						
2.2 SD4 4x4	140	08/10→10/14						
2.2 TD4 4x4	110 - 118	10/06→10/14						
3.2 4x4	171	10/06→10/14						
LAND ROVER - FREELANDER 2 VAN (L359) 10/06→10/14								
Accessory Kit, parking brake shoes								
2.2 TD4 4x4	118	10/06→10/14	➡			**03.0137-9350.2**	**669350**	

© 2021 Continental Aftermarket & Services GmbH

	kW				! #			
MAZDA - 5 (CR19) 02/05→12/10								
Brake Caliper								
1.8	85	02/05→05/10	➡			**24.3387-1747.5**	**241423**	ATE without holder + FSB
2.0	107	02/05→05/10	➡			**24.3387-1748.5**	**241424**	ATE without holder + FSB
2.0 CD	81 - 105	02/05→05/10						
MAZDA - 5 (CW) 06/10→								
Brake Caliper								
1.6 CD	85	07/10→	➡	; 09/10→		**24.3387-1747.5**	**241423**	ATE without holder + FSB
			➡	; 09/10→		**24.3387-1748.5**	**241424**	ATE without holder + FSB
1.8 MZR	85	09/10→	➡			**24.3387-1747.5**	**241423**	ATE without holder + FSB
2.0	110	09/10→	➡			**24.3387-1748.5**	**241424**	ATE without holder + FSB
2.0	106	06/10→	➡	; 01/11→		**24.3387-1747.5**	**241423**	ATE without holder + FSB
			➡	; 01/11→		**24.3387-1748.5**	**241424**	ATE without holder + FSB
MAZDA - B-SERIE (UN) 11/98→12/08								
Brake Caliper								
2.5 D 4WD	62	12/02→11/06	⬅			**24.3431-1719.5**	**241377**	without holder
			⬅			**24.3431-1720.5**	**241378**	without holder
2.5 TD 4WD	80	06/99→07/06	⬅	; 08/02→		**24.3431-1719.5**	**241377**	without holder
			⬅	; 08/02→		**24.3431-1720.5**	**241378**	without holder
MAZDA - BT-50 Pick-up (CD, UN) 08/06→12/15								
Brake Caliper								
2.5 MRZ-CD 4x4	105	12/06→12/15	⬅			**24.3431-1719.5**	**241377**	without holder
			⬅			**24.3431-1720.5**	**241378**	without holder
MERCEDES-BENZ - C-KLASSE Coupe (C204) 01/11→								
Wheel Speed Sensor								
C 63 AMG	380	01/12→	➡		2	**24.0710-2070.3**	**360591**	L= 1,035
MERCEDES-BENZ - CLS (C218) 01/11→12/17								
Wheel Speed Sensor								
CLS 220 BlueTEC / d	120 - 130	05/14→12/17	➡	+SA 802/803/804	2	**24.0710-2056.3**	**360577**	L= 722
CLS 250 BlueTEC / d 4-matic	150	05/14→12/17						
CLS 250 CDI / BlueTEC / d	150	04/11→12/17						
CLS 350	225	01/11→08/14						
CLS 350 BlueTEC / d	185 - 190	02/13→12/17						
CLS 350 BlueTEC / d 4-matic	185	02/13→12/17						
CLS 350 CDI / d	195	01/11→08/14						
CLS 350 CDI / d 4-matic	195	09/11→08/14						
CLS 350 d 4-matic	190	04/15→12/17						
CLS 400	245	05/14→12/17						
CLS 400 4-matic	245	05/14→12/17						
CLS 500	300	02/11→12/17						
CLS 500 4-matic	300	09/11→12/17						
CLS 63 AMG	386 - 430	01/11→12/17						
CLS 63 AMG 4-matic	410 - 430	02/13→12/17						
MERCEDES-BENZ - CLS Shooting Brake (X218) 10/12→12/17								
Wheel Speed Sensor								
CLS 220 BlueTEC / d	120 - 130	05/14→12/17	➡	+SA 802/803/804	2	**24.0710-2056.3**	**360577**	L= 722
CLS 250 BlueTEC / d 4-matic	150	05/14→12/17						
CLS 250 CDI / BlueTEC / d	150	10/12→12/17						
CLS 350	225	10/12→08/14						
CLS 350 BlueTEC / d	190	05/14→12/17						
CLS 350 BlueTEC / d 4-matic	185	05/14→12/17						
CLS 350 CDI / d	195	10/12→08/14						
CLS 350 CDI / d 4-matic	195	10/12→08/14						
↓								

	kW				! #			
MERCEDES-BENZ - CLS Shooting Brake (X218) 10/12→12/17								
Wheel Speed Sensor								
CLS 350 d 4-matic	190	04/15→12/17	➡	+SA 802/803/804	2	**24.0710-2056.3**	**360577**	L= 722
CLS 400	245	05/14→12/17						
CLS 400 4-matic	245	05/14→12/17						
CLS 500	300	10/12→12/17						
CLS 500 4-matic	300	10/12→12/17						
CLS 63 AMG	386 - 430	10/12→12/17						
CLS 63 AMG 4-matic	410 - 430	02/13→12/17						
MERCEDES-BENZ - E-KLASSE (W212) 01/09→12/16								
Wheel Speed Sensor								
E 180	115	08/13→12/15	➡	+SA 800/801/802/803	2	**24.0710-2056.3**	**360577**	L= 722
E 200	135	01/13→12/16						
E 200 CDI / BlueTEC	100	01/09→12/15						
E 200 CGI	135	08/09→12/15						
E 200 NGT	115 - 120	03/11→12/15						
E 220 BlueTEC	130	05/14→12/15						
E 220 CDI	120	01/09→12/15						
E 220 CDI / BlueTEC	125	01/09→12/16						
E 250	155	01/13→12/16						
E 250 CDI / BlueTEC	150	01/09→12/16						
E 250 CDI / BlueTEC 4-matic	150	01/11→12/15						
E 250 CGI	150	01/09→12/15						
E 300	170 - 185	01/09→12/15						
E 300 4-matic	185	07/11→12/15						
E 300 CDI / BlueTEC	170	03/11→12/15						
E 300 CDI	150	12/09→12/10						
E 350	200 - 225	01/09→12/15						
E 350 4-matic	200 - 225	01/09→12/15						
E 350 BlueTEC	155 - 190	01/09→12/15						
E 350 BlueTEC 4-matic	185 - 190	01/13→12/15						
E 350 CDI	170 - 195	01/09→12/15						
E 350 CDI 4-matic	170 - 195	09/09→12/15						
E 350 CGI	215	01/09→08/11						
E 400	245	01/13→12/16						
E 400 4-matic	245	01/13→12/16						
E 500	285 - 300	01/09→12/15						
E 500 4-matic	285 - 300	01/09→12/15						
E 63 AMG	386 - 430	12/09→12/16						
E 63 AMG 4-matic	410 - 430	01/13→12/16						
MERCEDES-BENZ - E-KLASSE Cabriolet (A207) 01/10→12/16								
Wheel Speed Sensor								
E 200	135	03/13→12/16	⬅	+SA 800/801/802/803	2	**24.0710-2071.3**	**360592**	L= 703
E 200 CGI	135	01/10→12/16						
E 220 BlueTEC	130	05/14→12/16	➡	+SA 800/801/802/803	2	**24.0710-2070.3**	**360591**	L= 1,035
E 220 CDI / BlueTEC / d	125	01/10→12/16						
E 220 CDI	120	02/10→12/16						
E 250	155	06/13→12/16						
E 250 CDI / BlueTEC / d	150	01/10→12/16						
E 250 CGI	150	01/10→12/16						
E 300	185	04/11→12/16						
E 320	200	07/14→12/16						
E 350	200 - 225	03/10→12/14						
E 350 BlueTEC/ d	190	05/14→12/16						
E 350 BlueTEC	185	06/13→12/16						
E 350 CDI	170 - 195	01/10→12/13						
E 350 CGI	215	01/10→12/14						
E 400	245	06/13→12/16						
E 500	285 - 300	01/10→12/16						

© 2021 Continental Aftermarket & Services GmbH

	kW				! #			
MERCEDES-BENZ - E-KLASSE Coupe (C207) 01/09→12/16								
Wheel Speed Sensor								
E 200	135	06/13→12/16	←	+SA 800/801/802/803	2	**24.0710-2071.3**	**360592**	L= 703
E 200 CGI	135	01/10→12/16						
E 220 BlueTEC	130	05/14→12/16	→	+SA 800/801/802/803	2	**24.0710-2070.3**	**360591**	L= 1,035
E 220 CDI / d	125	01/10→12/16						
E 220 CDI	120	02/10→12/14						
E 250	155	06/13→12/16						
E 250 CDI / BlueTEC / d	150	01/09→12/16						
E 250 CGI	150	01/09→12/16						
E 300	185	04/11→06/16						
E 320	200	07/14→12/16						
E 350	225	04/11→12/14						
E 350 BlueTEC / d	190	05/14→12/16						
E 350 BlueTEC	185	06/13→12/16						
E 350 CDI	170 - 195	01/09→06/13						
E 350 CGI	215	01/09→12/11						
E 400	245	06/13→12/16						
E 500	285 - 300	01/09→12/16						
E 350	200	01/10→12/11	←	+SA 800/801/802/803	2	**24.0710-2071.3**	**360592**	L= 703
E 350 4-matic	225	02/13→12/16	→	+SA 800/801/802/803	2	**24.0710-2070.3**	**360591**	L= 1,035
MERCEDES-BENZ - E-KLASSE T-Model (S212) 08/09→12/16								
Wheel Speed Sensor								
E 200	135	11/12→12/16	→	+SA 800/801/802/803	2	**24.0710-2056.3**	**360577**	L= 722
E 200 CDI / BlueTEC	100	11/09→12/16						
E 200 CGI	135	11/09→12/16						
E 220 BlueTEC	130	05/15→12/16						
E 220 CDI / BlueTEC	125	11/09→12/16						
E 220 CDI	120	08/09→08/14						
E 250	155	11/12→12/16						
E 250 CDI / BlueTEC	150	11/09→12/16						
E 250 CDI / BlueTEC 4-matic	150	07/10→12/16						
E 250 CGI	150	11/09→12/13						
E 300	170 - 185	11/09→12/16						
E 300 4-matic	185	07/11→12/16						
E 300 CDI / BlueTEC	170	11/09→12/16						
E 300 CDI	150	12/09→12/10						
E 350	200 - 225	08/09→12/14						
E 350 4-matic	200 - 225	11/09→12/16						
E 350 BlueTEC	155 - 190	11/09→12/16						
E 350 BlueTEC 4-matic	185 - 190	11/12→12/16						
E 350 CDI	170 - 195	11/09→12/13						
E 350 CDI 4-matic	170 - 195	11/09→12/13						
E 350 CGI	215	11/09→12/11						
E 400	245	01/13→12/16						
E 400 4-matic	245	01/13→12/16						
E 500	285 - 300	11/09→12/16						
E 500 4-matic	300	09/11→12/16						
E 63 AMG	386 - 430	08/09→12/16						
E 63 AMG 4-matic	410 - 430	02/11→12/16						
MERCEDES-BENZ - S-KLASSE (W220) 09/98→08/05								
Wheel Speed Sensor								
S 280	150	10/98→08/05	←		2	**24.0710-2074.3**	**360595**	L= 640
S 320	165	10/98→08/05						
S 320 CDI	145 - 150	08/99→08/05						
S 350	180	09/02→08/05						
S 400 CDI	184 - 191	06/00→08/05						
S 430	205	10/98→08/05						
S 500	220 - 225	10/98→08/05						
S 55 AMG	265	04/99→08/05						
S 55 AMG Kompressor	368	06/02→08/05						
S 600	270 - 368	01/00→08/05						

© 2021 Continental Aftermarket & Services GmbH

	kW				! #			
MERCEDES-BENZ - S-KLASSE Coupe (C215) 03/99→12/06								
Wheel Speed Sensor								
CL 500 CL 55 AMG CL 55 AMG Kompressor CL 600	225 265 368 270 - 368	03/99→03/06 10/99→03/06 06/02→03/06 03/99→03/06			2	**24.0710-2074.3**	**360595**	L= 640
MINI - MINI (F55) 09/13→								
Brake Caliper								
Cooper S Cooper SD	120 - 141 120 - 125	09/13→ 09/13→				**24.3541-1861.5**	**241277**	TRW without holder
Brake Disc								
Cooper S Cooper SD	120 - 141 120 - 125	09/13→ 09/13→		10/14→		**24.0122-0314.1**	**422314**	Ø 294 Brake Disc Thickness [mm] 22 Minimum thickness [mm] 20.4 Vented + S
MINI - MINI (F56) 12/13→								
Brake Caliper								
Cooper S Cooper SD	120 - 141 120 - 125	12/13→ 06/14→10/17				**24.3541-1861.5**	**241277**	TRW without holder
Brake Disc								
Cooper S Cooper SD	120 - 141 120 - 125	12/13→ 06/14→10/17				**24.0122-0314.1**	**422314**	Ø 294 Brake Disc Thickness [mm] 22 Minimum thickness [mm] 20.4 Vented + S
MINI - MINI Cabriolet (F57) 11/14→								
Brake Caliper								
Cooper S Cooper SD	120 - 141 120 - 125	11/14→ 05/15→				**24.3541-1861.5**	**241277**	TRW without holder
Brake Disc								
Cooper S	120 - 141	11/14→		11/15→		**24.0122-0314.1**	**422314**	Ø 294 Brake Disc Thickness [mm] 22 Minimum thickness [mm] 20.4 Vented + S
Cooper SD	120 - 125	05/15→		03/16→		**24.0122-0314.1**	**422314**	Ø 294 Brake Disc Thickness [mm] 22 Minimum thickness [mm] 20.4 Vented + S
MINI - MINI CLUBMAN (F54) 11/14→								
Brake Caliper								
Cooper Cooper D	100 100 - 110	12/14→ 12/14→				**24.3541-1861.5**	**241277**	TRW without holder
Brake Disc								
Cooper Cooper D	100 100 - 110	12/14→ 12/14→		07/15→		**24.0122-0314.1**	**422314**	Ø 294 Brake Disc Thickness [mm] 22 Minimum thickness [mm] 20.4 Vented + S
MINI - MINI COUNTRYMAN (F60) 10/16→								
Brake Caliper								
One One D	75 85	07/17→ 07/17→				**24.3541-1861.5**	**241277**	TRW without holder
Brake Disc								
One One D	75 85	07/17→ 07/17→				**24.0122-0314.1**	**422314**	Ø 294 Brake Disc Thickness [mm] 22 Minimum thickness [mm] 20.4 Vented + S

© 2021 Continental Aftermarket & Services GmbH

	kW				! #			
MITSUBISHI - COLT VI (Z3_A, Z2_A) 10/02→12/12								
Accessory Kit, brake shoes								
1.1 1.1 LPG 1.3 1.3 Flexfuel 1.3 LPG 1.5 DI-D	55 55 70 70 70 50 - 70	10/04→06/12 10/04→06/12 06/04→06/12 10/08→06/12 06/04→06/12 08/04→06/12	➡			**03.0137-9347.2**	**669347**	
MITSUBISHI - L200 / TRITON (KA_T, KB_T) 01/04→12/16								
Accessory Kit, brake shoes								
2.5 DiD 2.5 DI-D 4WD	100 100	11/05→12/15 11/05→12/15	➡	01/06→		**03.0137-9346.2**	**669346**	
2.5 DI-D 2.5 DI-D 16V 4WD 2.5 DI-D 4WD 3.5 4WD	94 98 123 - 131 137	04/10→12/15 04/07→12/15 10/07→12/15 08/11→12/15	➡			**03.0137-9346.2**	**669346**	
2.5 DI-D	123 - 131	08/07→12/15	➡	for vehicles with increased ground clearance		**03.0137-9346.2**	**669346**	
MITSUBISHI - L200 / TRITON Pritsche/Fahrgestell (KA_T, KB_T) 03/06→12/15								
Accessory Kit, brake shoes								
2.5 DI-D	94	08/07→12/15	➡	for vehicles with increased ground clearance		**03.0137-9346.2**	**669346**	
2.5 DI-D 4WD	131	09/09→12/15	➡	04/10→		**03.0137-9346.2**	**669346**	
MITSUBISHI - L200 (KJ_, KK_, KL_) 11/14→								
Accessory Kit, brake shoes								
2.2 DI-D 2.2 DI-D 4WD 2.4 DI-D 2.4 DI-D 4WD 2.5 DI-D 4WD	110 110 113 113 100	07/19→ 07/19→ 09/15→ 09/15→ 11/14→	➡			**03.0137-9346.2**	**669346**	
2.4 DI-D 4WD	133	11/14→	➡	09/15→		**03.0137-9346.2**	**669346**	
NISSAN - GT-R (R35) 12/07→								
Accessory Kit, parking brake shoes								
NISMO V6	441 353 - 419	07/14→ 12/08→	➡			**03.0137-9343.2**	**669343**	
V6	357	12/07→10/10	➡	02/09→		**03.0137-9343.2**	**669343**	
NISSAN - MURANO I (Z50) 04/02→12/09								
Accessory Kit, parking brake shoes								
3.5 4x4	172 - 180	08/03→09/08				**03.0137-9343.2**	**669343**	
NISSAN - MURANO II (Z51) 10/07→09/14								
Accessory Kit, parking brake shoes								
2.5 dCi 4x4 3.5 4x4	140 188 - 195	01/10→09/14 11/07→09/14	➡			**03.0137-9343.2**	**669343**	
NISSAN - MURANO II VAN (Z51) 10/07→09/14								
Accessory Kit, parking brake shoes								
2.5 dCi 4x4 3.5 CVTC 4x4	140 188	03/13→09/14 03/13→09/14	➡			**03.0137-9343.2**	**669343**	
NISSAN - MURANO III (Z52_) 10/14→								
Accessory Kit, parking brake shoes								
3.5 V6 ALL MODE 4x4-i	188	10/14→	➡			**03.0137-9343.2**	**669343**	
NISSAN - NAVARA Pick-up (D23) 07/14→								
Brake Pad Set, disc brake								
2.3 dCi 2.3 dCi 4x4 2.5 dCi 4x4	120 - 140 120 - 140 120	01/15→ 01/15→ 07/14→	⬅			**13.0460-5538.2**	**605538**	+ WK

	kW				! #			
NISSAN - NAVARA Pritsche/Fahrgestell (D23) 01/15→								
Brake Pad Set, disc brake								
2.3 dCi 4x4	120	01/15→	←			**13.0460-5538.2**	**605538**	+ WK
NISSAN - PATHFINDER IV (R52) 09/12→								
Accessory Kit, parking brake shoes								
3.5	190	10/13→				**03.0137-9343.2**	**669343**	
3.5 4WD	194	09/12→						
NISSAN - QUEST (E52) 09/09→								
Accessory Kit, parking brake shoes								
3.5 V6	194	02/12→	→			**03.0137-9343.2**	**669343**	
OPEL - INSIGNIA B Country Tourer (Z18) 06/17→								
Brake Pad Set, disc brake								
1.5	121	06/17→	→	+POC J61/JQ5; Brake Size: 17"		**13.0460-2631.2**	**602631**	TRW + WK + Zub
1.6 Turbo	147	06/18→				**13.0470-2631.2**	**LD2631**	TRW + WK + Zub Ceramic
2.0 4x4	191	06/17→						
2.0 CDTi	125	06/17→						
2.0 CDTi 4x4	125 - 154	06/17→						
OPEL - INSIGNIA B Grand Sport (Z18) 03/17→								
Brake Pad Set, disc brake								
1.4 Turbo	107	04/20→	→	+POC J61/JQ5; Brake Size: 17"		**13.0460-2631.2**	**602631**	TRW + WK + Zub
1.5	103 - 121	03/17→				**13.0470-2631.2**	**LD2631**	TRW + WK + Zub Ceramic
1.5 CDTi	90	02/20→						
1.6 CDTi	81 - 100	03/17→						
1.6 Turbo	147	06/18→						
2.0	147	04/20→						
2.0 4x4	191	03/17→						
2.0 CDTi	125 - 128	03/17→						
2.0 CDTi 4x4	125 - 154	03/17→						
2.0 GSi 4x4	169	04/20→						
2.0 TURBO	147	11/20→						
TURBO	125	04/21→						
OPEL - INSIGNIA B Sports Tourer (Z18) 03/17→								
Brake Pad Set, disc brake								
1.5	103 - 121	03/17→	→	+POC J61/JQ5; Brake Size: 17"		**13.0460-2631.2**	**602631**	TRW + WK + Zub
1.5 CDTi	90	02/20→				**13.0470-2631.2**	**LD2631**	TRW + WK + Zub Ceramic
1.6 CDTi	81 - 100	03/17→						
1.6 Turbo	147	06/18→						
2.0	147	04/20→						
2.0 4x4	169 - 191	03/17→						
2.0 CDTi	125 - 128	03/17→						
2.0 CDTi 4x4	125 - 154	03/17→						
PEUGEOT - 407 (6D_) 02/04→12/11								
Brake Caliper								
1.6 HDi 110	80	05/04→12/10	←			**24.3571-1745.5**	**240705**	TRW without holder
2.0 16V	103	09/05→12/10						
2.0 Bioflex	103	09/07→02/11						
2.0 Flex	103	10/05→02/11						
2.0 HDi	103	06/09→12/10						
1.8	85	03/04→07/05	←	; 05/04→		**24.3571-1745.5**	**240705**	TRW without holder
2.0	100	03/04→07/05						
1.8 16V	92	08/05→12/10	←	; 09/05→		**24.3571-1745.5**	**240705**	TRW without holder
2.0 HDi	93	11/04→10/07	←	; →Orga 11682		**24.3571-1745.5**	**240705**	TRW without holder
2.0 HDi 135	100	05/04→10/10						
PEUGEOT - 407 SW (6E_) 05/04→12/11								
Brake Caliper								
1.6 HDi 110	80	05/04→12/10	←			**24.3571-1745.5**	**240705**	TRW without holder
1.8	85	05/04→07/05						
2.0	100	05/04→07/05						
2.0 Bioflex	103	01/08→12/10						
↓								

© 2021 Continental Aftermarket & Services GmbH

	kW				! #			
PEUGEOT - 407 SW (6E_) 05/04→12/11								
Brake Caliper								
2.0 Flex 2.0 HDi	103 103	10/05→02/11 08/08→12/10				**24.3571-1745.5**	**240705**	TRW without holder
1.8 16V 2.0 16V	92 103	08/05→12/10 08/05→12/10		; 09/05→		**24.3571-1745.5**	**240705**	TRW without holder
2.0 HDi 135	100	07/04→12/10		; →Orga 11682		**24.3571-1745.5**	**240705**	TRW without holder
PEUGEOT - BOXER Bus 09/05→								
Brake Caliper								
2.0 BlueHDi 110 2.0 BlueHDi 130 2.0 BlueHDi 160 2.2 BlueHDi 120 2.2 BlueHDi 140 2.2 BlueHDi 165	81 96 120 88 103 121	07/15→09/19 07/15→09/19 07/15→09/19 07/19→ 07/19→ 08/19→		; Payload to [kg] 1,200; Payload code: 12Q		**24.3441-1705.5**	**241367**	BRE without holder
2.2 HDi 100 2.2 HDi 120 3.0 HDi 145 3.0 HDi 160	74 88 107 116	04/06→ 04/06→ 04/10→ 04/06→		; Payload [kg]: 1,400; not for facelift; Payload code: 14Q		**24.3441-1705.5**	**241367**	BRE without holder
				; Payload to [kg] 1,200; Payload code: 12Q		**24.3441-1705.5**	**241367**	BRE without holder
				; → 02/11; Payload from [kg] 1,200 Payload to [kg] 1,400; Payload code: 12Q / 14Q		**24.3441-1706.5**	**241368**	BRE without holder
2.2 HDi 110 2.2 HDi 130 2.2 HDi 150 3.0 HDi 175	81 96 110 130	03/11→ 03/11→ 03/11→ 03/11→		; Payload [kg]: 1,400; not for facelift; Payload code: 14Q		**24.3441-1705.5**	**241367**	BRE without holder
				; Payload to [kg] 1,200; Payload code: 12Q		**24.3441-1705.5**	**241367**	BRE without holder
PEUGEOT - BOXER Kasten 04/06→								
Brake Caliper								
2.0 BlueHDi 110 2.0 BlueHDi 130 2.0 BlueHDi 130 4x4 2.0 BlueHDi 160 2.0 BlueHDi 160 4x4 2.2 BlueHDi 120 2.2 BlueHDi 140 2.2 BlueHDi 165	81 96 96 120 120 88 103 121	07/15→09/19 07/15→09/19 07/15→09/19 07/15→09/19 07/15→09/19 07/19→ 07/19→ 07/19→		; Payload to [kg] 1,200; Payload code: 12Q		**24.3441-1705.5**	**241367**	BRE without holder
2.2 HDi 100 2.2 HDi 120 3.0 HDi 3.0 HDi 145 3.0 HDi 160	74 88 115 107 116	04/06→ 04/06→ 07/06→ 04/10→ 04/06→		; Payload [kg]: 1,400; not for facelift; Payload code: 14Q		**24.3441-1705.5**	**241367**	BRE without holder
				; Payload to [kg] 1,200; Payload code: 12Q		**24.3441-1705.5**	**241367**	BRE without holder
				; → 02/11; Payload from [kg] 1,200 Payload to [kg] 1,400; Payload code: 12Q / 14Q		**24.3441-1706.5**	**241368**	BRE without holder
2.2 HDi 110 2.2 HDi 130 2.2 HDi 130 4x4 2.2 HDi 150 2.2 HDi 150 4x4 3.0 HDi 175	81 96 96 110 110 130	03/11→ 03/11→ 03/11→ 03/11→ 03/11→ 03/11→		; Payload [kg]: 1,400; not for facelift; Payload code: 14Q		**24.3441-1705.5**	**241367**	BRE without holder
				; Payload to [kg] 1,200; Payload code: 12Q		**24.3441-1705.5**	**241367**	BRE without holder
PEUGEOT - BOXER Pritsche/Fahrgestell 04/06→								
Brake Caliper								
2.0 BlueHDi 110 2.0 BlueHDi 130 2.0 BlueHDi 160 2.2 BlueHDi 120 2.2 BlueHDi 140 2.2 BlueHDi 165	81 96 120 88 103 121	07/15→09/19 07/15→09/19 07/15→09/19 08/19→ 08/19→ 08/19→		; Payload to [kg] 1,200; Payload code: 12Q		**24.3441-1705.5**	**241367**	BRE without holder
2.2 HDi 100 2.2 HDi 120 3.0 HDi 3.0 HDi 145 3.0 HDi 160	74 88 115 107 116	04/06→ 04/06→ 04/06→ 04/10→ 04/06→		; Payload [kg]: 1,400; not for facelift; Payload code: 14Q		**24.3441-1705.5**	**241367**	BRE without holder
				; Payload to [kg] 1,200; Payload code: 12Q		**24.3441-1705.5**	**241367**	BRE without holder
				; → 02/11; Payload from [kg] 1,200 Payload to [kg] 1,400; Payload code: 12Q / 14Q		**24.3441-1706.5**	**241368**	BRE without holder
2.2 HDi 110 2.2 HDi 130 2.2 HDi 150 3.0 HDi 175	81 96 110 130	03/11→ 03/11→ 03/11→ 03/11→		; Payload [kg]: 1,400; not for facelift; Payload code: 14Q		**24.3441-1705.5**	**241367**	BRE without holder
				; Payload to [kg] 1,200; Payload code: 12Q		**24.3441-1705.5**	**241367**	BRE without holder
RENAULT - ALASKAN 10/16→								
Brake Pad Set, disc brake								
2.3 dCi 163 4x4 2.3 dCi 190 4x4	120 140	09/17→ 09/17→				**13.0460-5538.2**	**605538**	+ WK

	kW				! #			
RENAULT - GRAND SCÉNIC IV (R9_) 09/16→								
Brake Disc								
1.2 TCe 115 1.2 TCe 130 1.3 TCe 115 1.3 TCe 140 1.3 TCe 160 1.5 dCi 110 1.5 dCi 110 Hybrid Assist 1.6 dCi 130 1.6 dCi 160 1.7 Blue dCi 120 1.7 Blue dCi 150	85 96 85 103 117 - 120 81 81 96 118 88 110	09/16→ 09/16→ 01/18→ 01/18→ 01/18→ 09/16→ 04/17→ 09/16→ 09/16→ 08/18→ 08/18→	➡			**24.0111-0189.2**	**411189**	Ø 290 Brake Disc Thickness [mm] 11 Minimum thickness [mm] 9.5 + RLG / + ABS Ring
RENAULT - MEGANE IV Grandtour (K9A/M/N_) 04/16→								
Brake Disc								
1.2 TCe 100 1.2 TCe 130 1.3 TCe 100 1.3 TCe 115 1.3 TCe 140 1.3 TCe 160 1.5 Blue dCi 115 1.5 Blue dCi 95 1.5 dCi 110 1.5 dCi 90 1.6 16V 1.6 dCi 130 1.6 dCi 165 1.6 TCe 165 1.6 TCe 205	74 97 75 85 103 117 - 120 85 70 81 66 84 96 120 121 151	04/16→ 04/16→ 08/18→ 01/18→ 01/18→ 01/18→ 08/18→ 08/18→ 04/16→ 04/16→ 04/16→ 04/16→ 04/16→ 07/17→ 04/16→	➡	for vehicles with four wheel steering		**24.0111-0189.2**	**411189**	Ø 290 Brake Disc Thickness [mm] 11 Minimum thickness [mm] 9.5 + RLG / + ABS Ring
1.8 Blue dCi 150	110	02/19→	➡	+ eFSB		**24.0111-0189.2**	**411189**	Ø 290 Brake Disc Thickness [mm] 11 Minimum thickness [mm] 9.5 + RLG / + ABS Ring
RENAULT - MEGANE IV Schrägheck (B9A/M/N_) 11/15→								
Brake Disc								
1.2 TCe 100 1.2 TCe 130 1.3 TCe 100 1.3 TCe 115 1.3 TCe 140 1.3 TCe 160 1.5 Blue dCi 115 1.5 Blue dCi 95 1.5 dCi 110 1.5 dCi 90 1.6 16V 1.6 dCi 130 1.6 dCi 165 1.6 TCe 165 1.6 TCe 205	74 97 75 85 103 117 - 120 85 70 81 66 84 96 120 121 151	11/15→ 11/15→ 08/18→ 01/18→ 01/18→ 01/18→ 08/18→ 08/18→ 11/15→ 11/15→ 11/15→ 11/15→ 11/15→ 07/17→ 11/15→	➡	for vehicles with four wheel steering		**24.0111-0189.2**	**411189**	Ø 290 Brake Disc Thickness [mm] 11 Minimum thickness [mm] 9.5 + RLG / + ABS Ring
1.8 Blue dCi 150	110	02/19→	➡	+ eFSB		**24.0111-0189.2**	**411189**	Ø 290 Brake Disc Thickness [mm] 11 Minimum thickness [mm] 9.5 + RLG / + ABS Ring
RENAULT - SCÉNIC IV (J9_) 09/16→								
Brake Disc								
1.2 TCe 115 1.2 TCe 130 1.3 TCe 115 1.3 TCe 140 1.3 TCe 160 1.5 dCi 110 1.5 dCi 110 Hybrid Assist 1.5 dCi 95 1.6 dCi 130 1.6 dCi 160 1.7 Blue dCi 120 1.7 Blue dCi 150	85 96 85 103 117 - 120 81 81 70 96 118 88 110	09/16→ 09/16→ 01/18→ 01/18→ 01/18→ 09/16→ 04/17→ 09/16→ 09/16→ 09/16→ 08/18→ 08/18→	➡			**24.0111-0189.2**	**411189**	Ø 290 Brake Disc Thickness [mm] 11 Minimum thickness [mm] 9.5 + RLG / + ABS Ring

© 2021 Continental Aftermarket & Services GmbH

	kW				! #			
RENAULT - TALISMAN (LP_) 06/15→								
Brake Disc								
1.3 TCe 160	117	01/19→	➡			**24.0111-0189.2**	**411189**	Ø 290
1.5 dCi 110	81	11/15→						Brake Disc Thickness [mm] 11
1.6 dCi 130	96	11/15→						Minimum thickness [mm] 9.5
1.6 dCi 160	118	06/15→						+ RLG / + ABS Ring
1.6 TCe 150	110	11/15→						
1.6 TCe 200	147	11/15→						
1.7 Blue dCi 120	88	09/18→						
1.7 Blue dCi 150	110	09/18→						
1.8 TCe 225	165	09/18→						
2.0 Blue dCi 160	118	01/19→						
2.0 Blue dCi 200	147	01/19→						
RENAULT - TALISMAN Grandtour (KP_) 03/16→								
Brake Disc								
1.3 TCe 160	117	01/19→	➡			**24.0111-0189.2**	**411189**	Ø 290
1.5 dCi 110	81	03/16→						Brake Disc Thickness [mm] 11
1.6 dCi 130	96	03/16→						Minimum thickness [mm] 9.5
1.6 dCi 160	118	03/16→						+ RLG / + ABS Ring
1.6 TCe 150	110	03/16→						
1.6 TCe 200	147	03/16→						
1.7 Blue dCi 120	88	09/18→						
1.7 Blue dCi 150	110	09/18→						
1.8 TCe 225	165	09/18→						
2.0 Blue dCi 160	118	01/19→						
2.0 Blue dCi 200	147	01/19→						
SEAT - ATECA (KH7, KHP) 04/16→								
Brake Caliper								
1.0 TSI	81 - 85	05/16→	⬅	; +PR 1ZA		**24.3571-1801.5**	**241387**	without holder
1.4 TSI	110	06/16→	⬅	; +PR 1ZA		**24.3571-1802.5**	**241388**	without holder
1.4 TSI 4Drive	110	06/16→						
1.5 TSI	110	07/18→						
1.5 TSI 4Drive	110	07/18→						
1.6 TDI	85	04/16→07/18						
2.0 TDI	81 - 110	04/16→						
2.0 TDI 4Drive	110 - 140	04/16→						
2.0 TSI 4Drive	140	05/17→						
SEAT - EXEO (3R2) 12/08→05/13								
Accessory Kit, disc brake pad								
1.6	75	03/09→09/10	➡	04/09→; +PR 1KD / 1KP		**13.0460-0516.2**	**610516**	
1.8 T	110	12/08→05/10						
2.0 TDI	88 - 125	12/08→05/13						
2.0 TFSI	147	03/09→05/13						
1.8 TSI	88 - 118	05/10→05/13	➡	+PR 1KD / 1KP		**13.0460-0516.2**	**610516**	
2.0 TFSI	155	05/10→05/13						
SEAT - EXEO ST (3R5) 05/09→05/13								
Accessory Kit, disc brake pad								
1.6	75	06/09→09/10	➡	+PR 1KD / 1KP		**13.0460-0516.2**	**610516**	
1.8 T	110	06/09→05/10						
1.8 TSI	88 - 118	05/10→05/13						
2.0 TDI	88 - 125	05/09→05/13						
2.0 TFSI	147 - 155	06/09→05/13						
SEAT - LEON (1M1) 11/99→06/06								
Accessory Kit, disc brake pad								
1.4 16V	55	11/99→06/06	➡	→ 07/05; +PR 1KY / 2EE		**13.0460-0516.2**	**610516**	
1.6	74	11/99→06/06						
1.6 16 V	77	09/00→06/06						
1.8 20V	92	11/99→06/06						
1.8 20V T	132	11/99→06/06						
1.9 SDI	50	11/99→06/06						
1.9 TDI	66 - 96	11/99→06/06						
1.9 TDI Syncro	110	05/02→06/06						
1.8 20V T 4	132	11/99→06/06	➡	→ 07/05; +PR 1KY		**13.0460-0516.2**	**610516**	
1.8 T Cupra R	154	02/02→06/06	➡	05/02→ 07/05; +PR 1KY / 2EM		**13.0460-0516.2**	**610516**	
↓								

© 2021 Continental Aftermarket & Services GmbH

	kW				! #			
SEAT - LEON (1M1) 11/99→06/06								
Accessory Kit, disc brake pad								
1.8 T Cupra R 2.8 Cupra 4	165 150	07/03→06/06 02/01→06/06	➡	→ 07/05; +PR 1KY / 2EM		**13.0460-0516.2**	**610516**	
1.9 TDI	110	09/00→06/06	➡	02/01→ 07/05; +PR 1KY / 2EE		**13.0460-0516.2**	**610516**	
2.8	150	05/02→06/04	➡	+PR 1KY / 2EE		**13.0460-0516.2**	**610516**	
SEAT - LEON (5F1) 09/12→								
Brake Caliper								
1.0 TSi 1.0 TSI 1.2 TSI 1.4 TSI 1.5 TGi 1.5 TSI 1.6 TDI 1.8 TSI 2.0 Cupra 2.0 Cupra R 2.0 TDI 2.0 TSI	63 85 63 - 81 90 - 110 96 96 - 110 66 - 81 132 195 - 221 228 81 - 135 140	09/18→ 05/15→ 12/12→ 09/12→ 10/18→ 09/18→ 11/12→ 02/13→ 10/13→ 11/17→ 09/12→ 09/18→	⬅	⊞; +PR 1ZA		**24.3571-1801.5**	**241387**	without holder
			⬅	⊞; +PR 1ZA		**24.3571-1802.5**	**241388**	without holder
1.4 TGI	81	02/13→	⬅	⊞; 10/13→; +PR 1ZA		**24.3571-1801.5**	**241387**	without holder
			⬅	⊞; 10/13→; +PR 1ZA		**24.3571-1802.5**	**241388**	without holder
1.6 TDI	85	11/16→	⬅	⊞; 01/17→; +PR 1ZA		**24.3571-1801.5**	**241387**	without holder
			⬅	⊞; 01/17→; +PR 1ZA		**24.3571-1802.5**	**241388**	without holder
SEAT - LEON (KL1) 11/19→								
Brake Caliper								
1.0 TSI 1.0 TSI Mild Hybrid 1.4 TSI e-Hybrid 1.5 eTSI 1.5 TGI CNG 1.5 TSI 2.0 TDI 2.0 TFSI	66 - 81 81 110 - 150 110 96 96 - 110 85 - 110 140	03/20→ 08/20→ 05/20→ 11/19→ 08/20→ 11/19→ 11/19→ 03/21→	⬅	⊞; +PR 1ZK		**24.3571-1801.5**	**241387**	without holder
			⬅	⊞; +PR 1ZK		**24.3571-1802.5**	**241388**	without holder
SEAT - LEON Kasten/Schrägheck (5F1) 09/12→								
Brake Caliper								
1.2 TSI 1.6 TDI 2.0 TDI	81 66 - 77 110	04/14→ 09/12→10/16 10/12→	⬅	⊞; +PR 1ZA		**24.3571-1801.5**	**241387**	without holder
			⬅	⊞; +PR 1ZA		**24.3571-1802.5**	**241388**	without holder
SEAT - LEON SC (5F5) 01/13→								
Brake Caliper								
1.0 TSI 1.2 TSI 1.4 TSI 1.6 TDI 1.8 TSI 2.0 Cupra 2.0 TDI	85 63 - 81 90 - 110 66 - 81 132 195 - 221 105 - 135	05/15→08/18 01/13→08/18 02/13→08/18 02/13→08/18 02/13→08/18 10/13→08/18 02/13→	⬅	⊞; +PR 1ZA		**24.3571-1801.5**	**241387**	without holder
			⬅	⊞; +PR 1ZA		**24.3571-1802.5**	**241388**	without holder
1.6 TDI	85	11/16→08/18	⬅	⊞; 01/17→; +PR 1ZA		**24.3571-1801.5**	**241387**	without holder
			⬅	⊞; 01/17→; +PR 1ZA		**24.3571-1802.5**	**241388**	without holder
SEAT - LEON Sportstourer (KL8) 03/20→								
Brake Caliper								
1.0 TSI ↓	66 - 81	03/20→	⬅	⊞; +PR 1ZK		**24.3571-1801.5**	**241387**	without holder

© 2021 Continental Aftermarket & Services GmbH

	kW				! #			
SEAT - LEON Sportstourer (KL8) 03/20→								
Brake Caliper								
1.0 TSI Mild Hybrid	81	08/20→	←	; +PR 1ZK		**24.3571-1802.5**	**241388**	without holder
1.4 TSI e-Hybrid	110 - 150	05/20→						
1.5 eTSI	110	03/20→						
1.5 TSI	96 - 110	03/20→						
2.0 TDI	85 - 110	04/20→						
SEAT - LEON ST (5F8) 09/12→								
Brake Caliper								
1.0 TSi	63	09/18→	←	; +PR 1ZA		**24.3571-1801.5**	**241387**	without holder
1.0 TSI	85	05/15→	←	; +PR 1ZA		**24.3571-1802.5**	**241388**	without holder
1.2 TSI	63 - 81	08/13→						
1.4 TGI	81	10/13→						
1.4 TSI	90 - 110	09/12→						
1.5 TGi	96	10/18→						
1.5 TSI	96 - 110	09/18→						
1.6 TDI	66 - 81	09/13→						
1.6 TDI 4Drive	77 - 85	04/14→						
1.8 TSI	132	10/13→						
1.8 TSI 4Drive	132	11/14→						
2.0 Cupra	195 - 221	10/13→						
2.0 Cupra 4Drive	221	11/16→						
2.0 TDI	81 - 135	08/13→						
2.0 TDI 4Drive	110 - 135	04/14→						
2.0 TSI	140	09/18→						
2.0 TSI 4Drive	140	09/18→						
1.6 TDI	85	11/16→	←	; 01/17→; +PR 1ZA		**24.3571-1801.5**	**241387**	without holder
			←	; 01/17→; +PR 1ZA		**24.3571-1802.5**	**241388**	without holder
SEAT - LEON ST Kasten/Kombi (5F8) 01/13→								
Brake Caliper								
1.2 TSI	81	05/14→	←	; +PR 1ZA		**24.3571-1801.5**	**241387**	without holder
2.0 Cupra 4Drive	221	11/16→	←	; +PR 1ZA		**24.3571-1802.5**	**241388**	without holder
SEAT - TARRACO (KN2) 09/18→								
Brake Caliper								
1.5 TSI ACT	110	09/18→	←	; +PR 1Zk		**24.3571-1801.5**	**241387**	without holder
2.0 TDI	110	09/18→	←	; +PR 1ZK		**24.3571-1802.5**	**241388**	without holder
2.0 TDI 4Drive	110 - 147	09/18→						
2.0 TFSI 4Drive	180	01/21→						
2.0 TSI 4Drive	140	11/18→						
SEAT - TOLEDO II (1M2) 10/98→05/06								
Accessory Kit, disc brake pad								
1.4 16V	55	01/00→05/02	→	+PR 1KY / 2EE		**13.0460-0516.2**	**610516**	
1.6	74	10/98→07/04						
1.8 20V	92	10/98→07/04						
1.9 TDI	66 - 110	10/98→07/04						
1.9 TDI 4Drive	110	10/00→10/05						
2.3 V5	110	10/98→11/00						
2.3 V5 20V	125	09/00→11/03						
1.6 16V	77	06/00→05/06	→	→ 09/04; +PR 1KY / 2EE		**13.0460-0516.2**	**610516**	
1.9 TDI	96	05/03→05/06						
1.8 20VT	132	09/00→07/04	→	05/01→; +PR 1KY / 2EE		**13.0460-0516.2**	**610516**	
SKODA - KAROQ (NU7) 07/17→								
Brake Caliper								
1.0 TSI	81 - 85	07/17→	←	; +PR 1ZA		**24.3571-1801.5**	**241387**	without holder
1.4 TSI	110	09/19→	←	; +PR 1ZA		**24.3571-1802.5**	**241388**	without holder
1.6 SRE	81	06/20→						
1.6 TDI	85	07/17→						
2.0 TDI	110	07/17→						
↓								

	kW				! #			
SKODA - KAROQ (NU7) 07/17→								
Brake Caliper								
2.0 TSI 4x4	140	04/19→	←	; +PR 1ZA		**24.3571-1801.5**	**241387**	without holder
			←	; +PR 1ZA		**24.3571-1802.5**	**241388**	without holder
1.5 TSI 1.5 TSI 4x4 2.0 TDI 4x4	110 110 110 - 140	07/17→ 07/17→ 07/17→	←	; 10/17→; +PR 1ZA		**24.3571-1801.5**	**241387**	without holder
			←	; 10/17→; +PR 1ZA		**24.3571-1802.5**	**241388**	without holder
SKODA - KODIAQ (NS7, NV7) 10/16→								
Brake Caliper								
1.4 TSI	92 - 110	10/16→	←	; 03/17→; +PR 1ZA		**24.3571-1801.5**	**241387**	without holder
1.4 TSI 4x4 2.0 TDI 2.0 TDI 4x4 2.0 TSI 4x4	110 110 110 - 140 132	10/16→ 10/16→ 10/16→ 10/16→	←	; 03/17→; +PR 1ZA		**24.3571-1802.5**	**241388**	without holder
1.5 TSI 1.5 TSI 4x4 2.0 RS Bi-TDI 4x4 2.0 TDI 2.0 TDI 4x4 2.0 TSI 4x4	110 110 176 85 130 - 147 140	07/18→ 07/18→ 11/18→ 02/19→ 04/17→ 02/19→	←	; +PR 1ZA		**24.3571-1801.5**	**241387**	without holder
			←	; +PR 1ZA		**24.3571-1802.5**	**241388**	without holder
SKODA - OCTAVIA I (1U2) 09/96→12/10								
Accessory Kit, disc brake pad								
RS 1.8 T	132	05/01→01/06	→	01/03→; +PR 2ED		**13.0460-0516.2**	**610516**	
SKODA - OCTAVIA I Combi (1U5) 07/98→12/10								
Accessory Kit, disc brake pad								
RS 1.8 T	132	08/02→01/06	→	01/03→; +PR 2ED		**13.0460-0516.2**	**610516**	
SKODA - OCTAVIA III (5E3, NL3, NR3) 11/12→								
Brake Caliper								
1.0 TSI 1.2 TSI 1.4 TSI 1.4 TSI G-TEC 1.5 TSI 1.6 1.6 TDI 1.6 TDI 4x4 1.8 TSI 1.8 TSI 4x4 2.0 TDI 2.0 TDI 4x4 2.0 TDI RS 2.0 TSI 2.0 TSI 4x4 2.0 TSI RS	85 81 103 81 110 81 81 - 85 77 - 85 132 132 105 110 135 140 140 162 - 180	05/16→ 05/15→02/17 11/12→ 11/13→ 02/17→ 01/14→ 05/13→ 09/14→ 11/12→ 09/14→ 11/12→ 09/14→ 05/13→ 02/17→ 02/19→ 05/13→	←	; +PR 1ZA / 1ZK		**24.3571-1801.5**	**241387**	without holder
			←	; +PR 1ZA / 1ZK		**24.3571-1802.5**	**241388**	without holder
1.2 TSI 1.6 TDI 2.0 TDI	63 - 77 66 - 77 110	11/12→ 11/12→ 11/12→	←	; 02/13→; +PR 1ZA / 1ZK		**24.3571-1801.5**	**241387**	without holder
			←	; 02/13→; +PR 1ZA / 1ZK		**24.3571-1802.5**	**241388**	without holder
1.4 TSI	110	08/14→	←	; 05/15→; +PR 1ZA / 1ZK		**24.3571-1801.5**	**241387**	without holder
			←	; 05/15→; +PR 1ZA / 1ZK		**24.3571-1802.5**	**241388**	without holder
2.0 TDI / TDI RS 4x4	135	05/13→	←	; 09/14→; +PR 1ZA / 1ZK		**24.3571-1801.5**	**241387**	without holder
			←	; 09/14→; +PR 1ZA / 1ZK		**24.3571-1802.5**	**241388**	without holder
Brake Disc								
1.0 TSI 1.2 TSI 1.4 TSI 1.4 TSI G-TEC 1.5 TSI 1.6 1.6 TDI 1.6 TDI 4x4 ↓	85 81 103 81 110 81 81 - 85 77 - 85	05/16→ 05/15→02/17 11/12→ 11/13→ 02/17→ 01/14→ 05/13→ 09/14→	→	+PR 1KD		**24.0110-0420.1**	**410420**	Ø 253 Brake Disc Thickness [mm] 10 Minimum thickness [mm] 8 + S

© 2021 Continental Aftermarket & Services GmbH

	kW				! #			
SKODA - OCTAVIA III (5E3, NL3, NR3) 11/12→								
Brake Disc								
1.8 TSI 1.8 TSI 4x4 2.0 TDI 2.0 TDI 4x4 2.0 TDI RS 2.0 TSI 2.0 TSI 4x4 2.0 TSI RS	132 132 105 110 135 140 140 162 - 180	11/12→ 09/14→ 11/12→ 09/14→ 05/13→ 02/17→ 02/19→ 05/13→	➡	+PR 1KD		**24.0110-0420.1**	**410420**	Ø 253 Brake Disc Thickness [mm] 10 Minimum thickness [mm] 8 + S
1.2 TSI 1.6 TDI 2.0 TDI	63 - 77 66 - 77 110	11/12→ 11/12→ 11/12→	➡	02/13→; +PR 1KD		**24.0110-0420.1**	**410420**	Ø 253 Brake Disc Thickness [mm] 10 Minimum thickness [mm] 8 + S
1.4 TSI	110	08/14→	➡	05/15→; +PR 1KD		**24.0110-0420.1**	**410420**	Ø 253 Brake Disc Thickness [mm] 10 Minimum thickness [mm] 8 + S
2.0 TDI / TDI RS 4x4	135	05/13→	➡	09/14→; +PR 1KD		**24.0110-0420.1**	**410420**	Ø 253 Brake Disc Thickness [mm] 10 Minimum thickness [mm] 8 + S
SKODA - OCTAVIA III Combi (5E5, 5E6) 11/12→								
Brake Caliper								
1.0 TSI 1.2 TSI 1.4 TSI 1.4 TSI G-TEC 1.5 TSI 1.5 TSI G-TEC 1.6 1.6 TDI 1.6 TDI 4x4 1.8 TSI 1.8 TSI 4x4 2.0 TDI 2.0 TDI / TDI RS 4x4 2.0 TDI 4x4 2.0 TDI RS 2.0 TSI 2.0 TSI 4x4 2.0 TSI RS	85 81 103 81 110 96 81 81 - 85 77 - 85 132 132 105 135 110 135 140 140 169 - 180	05/16→ 05/15→02/17 11/12→ 11/13→ 02/17→ 01/19→ 01/14→ 05/13→ 11/12→ 11/12→ 11/12→ 11/12→ 09/14→ 11/12→ 05/13→ 02/17→ 02/19→ 05/15→	⬅	◪; +PR 1ZA / 1ZK		**24.3571-1801.5**	**241387**	without holder
			⬅	◪; +PR 1ZA / 1ZK		**24.3571-1802.5**	**241388**	without holder
1.2 TSI 1.6 TDI 2.0 TDI	63 - 77 66 - 77 110	11/12→ 11/12→ 11/12→	⬅	◪; 02/13→; +PR 1ZA / 1ZK		**24.3571-1801.5**	**241387**	without holder
			⬅	◪; 02/13→; +PR 1ZA / 1ZK		**24.3571-1802.5**	**241388**	without holder
1.4 TSI	110	08/14→	⬅	◪; 05/15→; +PR 1ZA / 1ZK		**24.3571-1801.5**	**241387**	without holder
			⬅	◪; 05/15→; +PR 1ZA / 1ZK		**24.3571-1802.5**	**241388**	without holder
2.0 TSI RS	162	11/12→	⬅	◪; 05/13→; +PR 1ZA / 1ZK		**24.3571-1801.5**	**241387**	without holder
			⬅	◪; 05/13→; +PR 1ZA / 1ZK		**24.3571-1802.5**	**241388**	without holder
Brake Disc								
1.0 TSI 1.2 TSI 1.4 TSI 1.4 TSI G-TEC 1.5 TSI 1.5 TSI G-TEC 1.6 1.6 TDI 1.6 TDI 4x4 1.8 TSI 1.8 TSI 4x4 2.0 TDI 2.0 TDI / TDI RS 4x4 2.0 TDI 4x4 2.0 TDI RS 2.0 TSI 2.0 TSI 4x4 2.0 TSI RS	85 81 103 81 110 96 81 81 - 85 77 - 85 132 132 105 135 110 135 140 140 169 - 180	05/16→ 05/15→02/17 11/12→ 11/13→ 02/17→ 01/19→ 01/14→ 05/13→ 11/12→ 11/12→ 11/12→ 11/12→ 09/14→ 11/12→ 05/13→ 02/17→ 02/19→ 05/15→	➡	+PR 1KD		**24.0110-0420.1**	**410420**	Ø 253 Brake Disc Thickness [mm] 10 Minimum thickness [mm] 8 + S
↓								

	kW				! #			
SKODA - OCTAVIA III Combi (5E5, 5E6) 11/12→								
Brake Disc								
1.2 TSI	63 - 77	11/12→	➡	02/13→; +PR 1KD		**24.0110-0420.1**	**410420**	Ø 253 Brake Disc Thickness [mm] 10 Minimum thickness [mm] 8 + S
1.6 TDI	66 - 77	11/12→						
2.0 TDI	110	11/12→						
1.4 TSI	110	08/14→	➡	05/15→; +PR 1KD		**24.0110-0420.1**	**410420**	Ø 253 Brake Disc Thickness [mm] 10 Minimum thickness [mm] 8 + S
2.0 TSI RS	162	11/12→	➡	05/13→; +PR 1KD		**24.0110-0420.1**	**410420**	Ø 253 Brake Disc Thickness [mm] 10 Minimum thickness [mm] 8 + S
SKODA - OCTAVIA IV (NX3) 01/20→								
Brake Caliper								
1.0 TSI	81	06/20→	⬅	; +PR 1ZK		**24.3571-1801.5**	**241387**	without holder
1.0 TSI e-TEC	81	06/20→						
1.4 TSI iV	110	06/20→	⬅	; +PR 1ZK		**24.3571-1802.5**	**241388**	without holder
1.4 TSI IV	110	06/20→						
1.4 TSI iV RS	180	06/20→						
1.5 TSI	110	01/20→						
1.5 TSI G-TEC	96	06/20→						
1.6 SRE	81	07/20→						
2.0 RS TDI	147	07/20→						
2.0 RS TDI 4x4	147	07/20→						
2.0 TDI	85 - 110	01/20→						
2.0 TSI RS	180	03/20→						
TSI e-TEC	110	11/20→						
SKODA - OCTAVIA IV Combi (NX5) 11/19→								
Brake Caliper								
1.0 TSI	81	06/20→	⬅	; +PR 1ZK		**24.3571-1801.5**	**241387**	without holder
1.0 TSI e-TEC	81	06/20→						
1.4 TSI iV	110	06/20→	⬅	; +PR 1ZK		**24.3571-1802.5**	**241388**	without holder
1.4 TSI iV RS	180	06/20→						
1.4 TSI IV RS	110	06/20→						
1.5 TSI	110	11/19→						
1.5 TSI G-TEC	96	06/20→						
1.6 SRE	81	06/20→						
2.0 RS TDI	147	07/20→						
2.0 RS TDI 4x4	147	07/20→						
2.0 TDI	85 - 110	11/19→						
2.0 TDI 4x4	110	09/20→						
2.0 TFSI	140	09/20→						
2.0 TSI 4x4	140	09/20→						
2.0 TSI RS	180	03/20→						
TSI e-TEC	110	11/20→						
SKODA - SUPERB III (3V3) 03/15→								
Brake Caliper								
1.4 TSI	92 - 110	03/15→	⬅	; +PR 1ZA / 1ZK		**24.3571-1801.5**	**241387**	without holder
1.4 TSI 4x4	110	03/15→	⬅	; +PR 1ZA / 1ZK		**24.3571-1802.5**	**241388**	without holder
1.4 TSI iV	115 - 160	08/19→						
1.5 TSI	110	02/17→						
1.6 TDI	88	03/15→						
1.8 TSI	132	03/15→						
2.0 TDI	90 - 147	03/15→						
2.0 TDI 4x4	110 - 147	03/15→						
2.0 TSI	140 - 162	03/15→						
2.0 TSI 4x4	200 - 206	03/15→						
SKODA - SUPERB III Kombi (3V5) 03/15→								
Brake Caliper								
1.4 TSI	92 - 110	03/15→	⬅	; +PR 1ZA / 1ZK		**24.3571-1801.5**	**241387**	without holder
1.4 TSI 4x4	110	03/15→	⬅	; +PR 1ZA / 1ZK		**24.3571-1802.5**	**241388**	without holder
1.4 TSI iV	115 - 160	08/19→						
1.5 TSi	110	02/17→						
1.6 TDI	88	03/15→						
1.8 TSI	132	03/15→						
↓								

© 2021 Continental Aftermarket & Services GmbH

	kW				! #			
SKODA - SUPERB III Kombi (3V5) 03/15→								
Brake Caliper								
2.0 TDI	90 - 147	03/15→	←	; +PR 1ZA / 1ZK		**24.3571-1801.5**	**241387**	without holder
2.0 TDI 4x4	110 - 147	03/15→	←	; +PR 1ZA / 1ZK		**24.3571-1802.5**	**241388**	without holder
2.0 TSI	140 - 162	03/15→						
2.0 TSI 4x4	200 - 206	03/15→						
SMART - FORFOUR (454) 01/04→06/06								
Accessory Kit, brake shoes								
1.1	47 - 55	01/04→06/06	→			**03.0137-9347.2**	**669347**	
1.3	70	01/04→06/06						
1.5	90	01/04→06/06						
1.5 CDI	50	09/04→06/06						
SUZUKI - GRAND VITARA II (JT, TE, TD) 04/05→02/15								
Brake Caliper								
1.6	78	10/05→02/15	←			**24.3601-1743.5**	**241369**	ADV without holder
1.6 All-wheel Drive	73 - 78	04/05→02/15						
1.9 DDiS	95	03/06→08/08						
1.9 DDiS All-wheel Drive	95	10/05→02/15						
2.0	103	10/05→02/15						
2.0 All-wheel Drive	103	10/05→02/15						
2.4 All-wheel Drive	122 - 124	01/09→02/15						
2.7 All-wheel Drive	136	01/07→12/08						
3.2 All-wheel Drive	171	01/09→02/15						
VW - ARTEON (3H7, 3H8) 03/17→								
Brake Caliper								
1.5 TSI	110	11/17→07/19	←	; +PR 1ZA / 1ZD / 1ZK / 1ZL		**24.3571-1801.5**	**241387**	without holder
2.0 TDI	110 - 147	03/17→	←	; +PR 1ZA / 1ZD / 1ZK / 1ZL		**24.3571-1802.5**	**241388**	without holder
2.0 TDI 4motion	140 - 176	03/17→						
2.0 TSI	140	05/17→						
2.0 TSI 4motion	200 - 206	04/17→						
VW - ARTEON SHOOTING BRAKE (3H9) 06/20→								
Brake Caliper								
1.5 TSi	110	08/20→	←	; +PR 1ZA / 1ZD / 1ZK / 1ZL		**24.3571-1801.5**	**241387**	without holder
2.0 TDI	110 - 147	09/20→	←	; +PR 1ZA / 1ZD / 1ZK / 1ZL		**24.3571-1802.5**	**241388**	without holder
2.0 TDI 4motion	140 - 147	09/20→						
2.0 TSi 4motion	140 - 200	05/19→						
2.0 TSI 4motion	206	06/20→						
VW - BORA 01/07→								
Accessory Kit, disc brake pad								
2.0	85	01/07→	→	+PR 1KY		**13.0460-0516.2**	**610516**	
VW - BORA I (1J2) 10/98→12/13								
Accessory Kit, disc brake pad								
1.4 16V	55	03/00→05/05	→	→ 12/04; +PR 1KY		**13.0460-0516.2**	**610516**	
1.6	74 - 75	10/98→05/05						
1.6 16V	77	05/00→05/05						
1.6 FSI	81	01/02→05/05						
1.8	92	10/98→05/05						
1.8 4motion	92	02/99→05/05						
1.9 SDI	50	10/98→05/05						
1.9 TDI	74	09/00→05/05						
1.9 TDI 4motion	74	09/00→05/05						
2.0	85	10/98→12/13						
2.0 4motion	85	04/00→05/05						
2.3 V5	125	10/00→05/05						
2.3 V5 4motion	125	10/00→05/05						
1.8 T	110	05/00→05/05	→	09/00→ 12/04; +PR 1KY		**13.0460-0516.2**	**610516**	
1.8 T	132	03/02→05/05	→	05/02→ 12/04; +PR 1KY		**13.0460-0516.2**	**610516**	
↓								

	kW				! #			
VW - BORA I (1J2) 10/98→12/13								
Accessory Kit, disc brake pad								
1.9 TDI	66	10/98→05/05	➡	→ 06/01; +PR 1KY		**13.0460-0516.2**	**610516**	
1.9 TDI 1.9 TDI 4motion 2.3 V5	81 85 110	10/98→06/01 02/99→06/01 10/98→10/00	➡	+PR 1KY		**13.0460-0516.2**	**610516**	
1.9 TDI 1.9 TDI 4motion	85 66	12/98→01/02 11/98→04/02	➡	02/99→ 06/01; +PR 1KY		**13.0460-0516.2**	**610516**	
1.9 TDI 1.9 TDI 4motion	96 96	11/00→05/05 11/00→05/05	➡	04/01→ 12/04; +PR 1KY		**13.0460-0516.2**	**610516**	
1.9 TDI 1.9 TDI 4motion	110 110	05/00→05/05 05/00→05/05	➡	10/00→ 12/04; +PR 1KY		**13.0460-0516.2**	**610516**	
2.3 V5 4motion	110	12/98→10/00	➡	02/99→; +PR 1KY		**13.0460-0516.2**	**610516**	
2.8 V6 4motion	150	03/99→05/05	➡	05/99→ 12/04; +PR 1KY		**13.0460-0516.2**	**610516**	
VW - BORA Variant (1J6) 05/99→05/05								
Accessory Kit, disc brake pad								
1.4 16V 1.6 1.6 16V 1.6 FSI 1.8 4motion 1.8 T 1.9 TDI 1.9 TDI 4motion 2.0 2.0 4motion 2.3 V5 2.3 V5 4motion 2.8 V6 4motion	55 74 - 75 77 81 92 132 74 - 110 74 - 110 85 85 125 125 150	09/01→05/05 05/99→05/05 02/00→05/05 01/02→05/05 05/99→05/05 05/02→05/05 09/00→05/05 09/00→05/05 05/99→05/05 04/00→05/05 10/00→05/05 10/00→05/05 05/99→05/05	➡	→ 12/04; +PR 1KY		**13.0460-0516.2**	**610516**	
1.8 T	110	05/00→05/05	➡	09/00→ 12/04; +PR 1KY		**13.0460-0516.2**	**610516**	
1.9 TDI 1.9 TDI 4motion 2.3 V5 2.3 V5 4motion	81 - 85 85 110 110	05/99→06/01 05/99→06/01 05/99→10/00 05/99→10/00	➡	+PR 1KY		**13.0460-0516.2**	**610516**	
1.9 TDI 1.9 TDI 4motion	96 96	11/00→05/05 11/00→05/05	➡	04/01→ 12/04; +PR 1KY		**13.0460-0516.2**	**610516**	
2.0 4motion	88	12/99→05/03	➡	04/00→; +PR 1KY		**13.0460-0516.2**	**610516**	
VW - CADDY IV Großraumlimousine (SAB, SAJ) 05/15→								
Brake Caliper								
1.0 TSI	62 - 75	11/15→09/20	⬅	; +PR 1ZA		**24.3571-1801.5**	**241387**	without holder
1.2 TSI 1.4 TGI CNG 1.4 TSI 1.6 1.6 TDI 2.0 TDI 2.0 TDI 4motion ABT e-Caddy	62 81 92 - 96 81 55 - 75 55 - 110 81 - 110 83	06/15→09/20 06/15→09/20 05/15→09/20 11/15→09/20 05/15→09/20 05/15→09/20 05/15→09/20 04/20→	⬅	; +PR 1ZA		**24.3571-1802.5**	**241388**	without holder
VW - CADDY IV Kasten/Großraumlimousine (SAA, SAH) 05/15→								
Brake Caliper								
1.0 TSI 1.2 TSI	75 62	11/15→09/20 06/15→09/20	⬅	; +PR 1ZA		**24.3571-1801.5**	**241387**	without holder
1.4 TGI CNG 1.4 TSI 1.6 1.6 TDI 2.0 TDI 2.0 TDI 4motion ABT e-Caddy	81 92 - 96 81 55 - 75 55 - 110 55 - 110 83	06/15→09/20 05/15→09/20 11/15→09/20 05/15→09/20 05/15→09/20 05/15→09/20 04/20→	⬅	; +PR 1ZA		**24.3571-1802.5**	**241388**	without holder

© 2021 Continental Aftermarket & Services GmbH

	kW				! #			
VW - CADDY V Großraumlimousine (SBB, SBJ) 09/20→								
Brake Caliper								
TDi BMT	55 - 90	09/20→	←	; +PR 1ZK		**24.3571-1801.5**	**241387**	without holder
TSi EVO	84	01/21→	←	; +PR 1ZK		**24.3571-1802.5**	**241388**	without holder
VW - CADDY V Kasten/Großraumlimousine (SBA, SBH) 09/20→								
Brake Caliper								
TDi BMT	55 - 90	09/20→	←	; +PR 1ZK		**24.3571-1801.5**	**241387**	without holder
TSi EVO	84	01/21→	←	; +PR 1ZK		**24.3571-1802.5**	**241388**	without holder
VW - CADDY ALLTRACK Großraumlimousine (SAB) 05/15→								
Brake Caliper								
1.0 TSI	62 - 75	11/15→	←	; +PR 1ZA		**24.3571-1801.5**	**241387**	without holder
1.2 TSI	62	06/15→	←	; +PR 1ZA		**24.3571-1802.5**	**241388**	without holder
1.4 TGI CNG	81	06/15→						
1.4 TSI	92 - 96	05/15→						
1.6 TDI	55 - 75	05/15→						
2.0 TDI	55 - 110	05/15→						
2.0 TDI 4motion	90 - 110	05/15→						
2.0 TDI 4motion	81 - 103	05/15→	←	; 11/15→; +PR 1ZA		**24.3571-1801.5**	**241387**	without holder
			←	; 11/15→; +PR 1ZA		**24.3571-1802.5**	**241388**	without holder
VW - CADDY ALLTRACK Kasten/Großraumlimousine (SAA) 05/15→								
Brake Caliper								
1.0 TSI	75	11/15→	←	; +PR 1ZA		**24.3571-1801.5**	**241387**	without holder
1.2 TSI	62	06/15→	←	; +PR 1ZA		**24.3571-1802.5**	**241388**	without holder
1.4 TGI CNG	81	06/15→						
1.4 TSI	92 - 96	05/15→						
1.6 TDI	55 - 75	05/15→						
2.0 TDI	55 - 110	05/15→						
2.0 TDI 4motion	81 - 110	05/15→						
VW - CRAFTER Bus (SYI, SYJ) 09/16→								
Brake Pad Set, disc brake								
2.0 TDI	75 - 130	09/16→	←	01/17→; +PR 1LA		**13.0460-3886.2**	**603886**	+ WE / - WK + Zub
			→	01/17→; +PR 1LB		**13.0460-3886.2**	**603886**	+ WE / - WK + Zub
2.0 TDI 4motion	103 - 130	03/17→	←	+PR 1LA		**13.0460-3886.2**	**603886**	+ WE / - WK + Zub
			→	+PR 1LB		**13.0460-3886.2**	**603886**	+ WE / - WK + Zub
VW - CRAFTER Kasten (SY_, SX_) 09/16→								
Brake Pad Set, disc brake								
2.0 TDI	75 - 130	09/16→	←	01/17→; +PR 1LA		**13.0460-3886.2**	**603886**	+ WE / - WK + Zub
			→	01/17→; +PR 1LB		**13.0460-3886.2**	**603886**	+ WE / - WK + Zub
2.0 TDI 4motion	103 - 130	03/17→	←	+PR 1LA		**13.0460-3886.2**	**603886**	+ WE / - WK + Zub
2.0 TDI RWD	80 - 130	05/17→	→	+PR 1LB		**13.0460-3886.2**	**603886**	+ WE / - WK + Zub
e-Crafter	100	07/18→						
VW - CRAFTER Pritsche/Fahrgestell (SZ_) 11/16→								
Brake Pad Set, disc brake								
2.0 TDI	75 - 130	11/16→	←	01/17→; +PR 1LA		**13.0460-3886.2**	**603886**	+ WE / - WK + Zub
			→	01/17→; +PR 1LB		**13.0460-3886.2**	**603886**	+ WE / - WK + Zub
2.0 TDI 4motion	103 - 130	03/17→	←	+PR 1LA		**13.0460-3886.2**	**603886**	+ WE / - WK + Zub
2.0 TDI RWD	80 - 130	11/16→	→	+PR 1LB		**13.0460-3886.2**	**603886**	+ WE / - WK + Zub

© 2021 Continental Aftermarket & Services GmbH

	kW				! #			
VW - GOLF IV (1J1) 08/97→12/07								
Accessory Kit, disc brake pad								
1.4 16V 1.6 1.6 16V 1.6 FSI 2.3 V5	55 75 77 81 125	10/97→05/04 08/00→06/05 02/00→06/05 01/02→06/05 10/00→06/05	➡	→ 10/03; +PR 1KY		**13.0460-0516.2**	**610516**	
1.6 1.8 1.9 SDI 1.9 TDI	74 92 50 81	08/97→05/04 08/97→06/05 08/97→06/05 08/97→05/04	➡	10/97→ 10/03; +PR 1KY		**13.0460-0516.2**	**610516**	
1.8 T 2.3 V5	110 110	08/97→06/05 08/97→10/00	➡	10/97→; +PR 1KY		**13.0460-0516.2**	**610516**	
1.8 T GTI	132	08/01→06/05	➡	→ 10/03		**13.0460-0516.2**	**610516**	
1.9 TDI	66	10/97→05/04	➡	→ 06/01; +PR 1KY		**13.0460-0516.2**	**610516**	
1.9 TDI 2.0 BiFuel	74 85	09/00→06/05 05/02→05/03	➡	+PR 1KY		**13.0460-0516.2**	**610516**	
1.9 TDI	85	12/98→06/01	➡	05/99→; +PR 1KY		**13.0460-0516.2**	**610516**	
1.9 TDI	96	11/00→06/05	➡	04/01→ 10/03; +PR 1KY		**13.0460-0516.2**	**610516**	
1.9 TDI	110	05/00→06/05	➡	09/00→ 10/03; +PR 1KY		**13.0460-0516.2**	**610516**	
2.0	85	07/98→05/04	➡	08/98→ 10/03; +PR 1KY		**13.0460-0516.2**	**610516**	
VW - GOLF IV Van (1J1) 10/97→05/04								
Accessory Kit, disc brake pad								
1.9 TDI	66	05/00→09/02	➡	→ 06/01; +PR 1KY		**13.0460-0516.2**	**610516**	
1.9 TDI	96	04/01→05/04	➡	→ 10/03; +PR 1KY		**13.0460-0516.2**	**610516**	
			➡	→ 06/01; +PR 1KY		**13.0460-0516.2**	**610516**	
VW - GOLF VII (5G1, BQ1, BE1, BE2) 08/12→								
Brake Caliper								
1.0 TSI	63 - 85	05/15→	⬅	◪; +PR 1ZA / 1ZD		**24.3571-1801.5**	**241387**	without holder
1.2 TSI 1.4 GTE Hybrid 1.4 GTE HYBRID 1.4 TSI 1.4 TSI MultiFuel 1.5 TGI 1.5 TSI 1.6 1.6 TDI 1.6 TDI 4motion 2.0 GTD 2.0 GTI 2.0 GTI Clubsport 2.0 GTI Clubsport S 2.0 GTI TCR 2.0 R 4motion 2.0 TDI 2.0 TDI 4motion	77 - 81 110 110 92 - 110 90 - 92 96 96 - 110 81 66 - 85 77 - 81 135 155 - 180 195 228 213 206 - 228 81 - 110 110	11/12→ 05/14→ 07/19→08/20 05/14→ 04/13→ 11/18→ 04/17→ 05/14→ 04/13→ 11/12→ 04/13→ 04/13→ 02/16→03/17 09/16→ 11/18→ 11/13→ 08/12→ 11/12→	⬅	◩; +PR 1ZA / 1ZD		**24.3571-1802.5**	**241388**	without holder
1.2 TSI 1.4 TSI 1.6 TDI	63 103 77	08/12→ 08/12→ 08/12→	⬅ ⬅	◪; 11/12→; +PR 1ZA / 1ZD ◩; 11/12→; +PR 1ZA / 1ZD		**24.3571-1801.5** **24.3571-1802.5**	**241387** **241388**	without holder without holder
1.4 TGI CNG	81	06/13→	⬅ ⬅	◪; 08/13→; +PR 1ZA / 1ZD ◩; 08/13→; +PR 1ZA / 1ZD		**24.3571-1801.5** **24.3571-1802.5**	**241387** **241388**	without holder without holder
1.4 TSI 1.6 TDI	90 81	11/12→ 01/13→	⬅ ⬅	◪; 06/13→; +PR 1ZA / 1ZD ◩; 06/13→; +PR 1ZA / 1ZD		**24.3571-1801.5** **24.3571-1802.5**	**241387** **241388**	without holder without holder
VW - GOLF VII Van (5G1) 08/12→								
Brake Caliper								
1.6 TDi BlueMotion	77	08/12→	⬅ ⬅	◪; 11/12→; +PR 1ZA / 1ZD ◩; 11/12→; +PR 1ZA / 1ZD		**24.3571-1801.5** **24.3571-1802.5**	**241387** **241388**	without holder without holder
1.6 TDi BlueMotion 2.0 GTi 2.0 TDi BlueMotion	81 162 110	11/13→ 04/13→ 05/13→	⬅ ⬅	◪; +PR 1ZA / 1ZD ◩; +PR 1ZA / 1ZD		**24.3571-1801.5** **24.3571-1802.5**	**241387** **241388**	without holder without holder

© 2021 Continental Aftermarket & Services GmbH

	kW				! #			
VW - GOLF VII Variant (BA5, BV5) 04/13→								
Brake Caliper								
1.0 TSI	63 - 85	05/15→	←	; +PR 1ZA / 1ZD		**24.3571-1801.5**	**241387**	without holder
1.2 TSI 1.4 TGI CNG 1.4 TSI 1.4 TSI MultiFuel 1.5 TGI 1.5 TSI 1.6 1.6 TDI 1.8 TSI 4motion 2.0 GTD 2.0 R 360S 4motion 2.0 R 4motion	81 81 92 - 110 90 - 92 96 96 - 110 81 85 132 135 265 206 - 228	04/14→ 09/13→ 05/14→ 04/13→03/17 12/18→ 04/17→ 05/14→03/17 11/16→ 11/16→ 01/15→03/17 09/16→ 03/15→	←	; +PR 1ZA / 1ZD		**24.3571-1802.5**	**241388**	without holder
1.2 TSI	63 - 77	05/13→	←	; 07/13→; +PR 1ZA / 1ZD		**24.3571-1801.5**	**241387**	without holder
1.4 TSI 1.6 TDI 1.6 TDI 4motion 2.0 TDI 2.0 TDI 4motion	90 - 103 66 - 81 77 - 81 81 - 110 110	05/13→ 05/13→03/17 05/13→03/17 04/13→ 04/13→05/18	←	; 07/13→; +PR 1ZA / 1ZD		**24.3571-1802.5**	**241388**	without holder
VW - GOLF VIII (CD1) 07/19→								
Brake Caliper								
1.0 TSI	66 - 81	02/20→	←	; +PR 1ZK		**24.3571-1801.5**	**241387**	without holder
1.4 GTE Plug-in Hybrid 1.5 TGI 1.5 TSI 2.0 GTI 2.0 GTI Clubsport 2.0 TDI 2.0 TDI 4motion 2.0 TSI R 4motion	110 96 96 - 110 180 221 85 - 110 147 235	09/20→ 09/20→ 07/19→ 09/20→ 10/20→ 08/19→ 09/20→ 09/20→	←	; +PR 1ZK		**24.3571-1802.5**	**241388**	without holder
VW - GOLF VIII Variant (CG5) 08/20→								
Brake Caliper								
1.0 TSI	66 - 81	08/20→	←	; +PR 1ZK		**24.3571-1801.5**	**241387**	without holder
1.5 TSI 2.0 GTI 2.0 TDI	96 - 110 180 85 - 110	08/20→ 09/20→ 08/20→	←	; +PR 1ZK		**24.3571-1802.5**	**241388**	without holder
VW - GOLF ALLTRACK VII Variant (BA5, BV5) 12/14→								
Brake Caliper								
1.6 TDI 4motion	81	12/14→	←	; +PR 1ZA / 1ZD		**24.3571-1801.5**	**241387**	without holder
1.8 TSI 4motion 2.0 TDI 4motion	132 110 - 135	12/14→ 12/14→	←	; +PR 1ZA / 1ZD		**24.3571-1802.5**	**241388**	without holder
VW - GOLF ALLTRACK VIII (CG5) 11/20→								
Brake Caliper								
2.0 TDI 4motion	147	11/20→	←	; +PR 1ZK		**24.3571-1801.5**	**241387**	without holder
			←	; +PR 1ZK		**24.3571-1802.5**	**241388**	without holder
VW - GOLF SPORTSVAN VII (AM1, AN1) 02/14→								
Brake Caliper								
1.0 TSI	63 - 85	05/15→	←	; +PR 1ZA		**24.3571-1801.5**	**241387**	without holder
1.2 TSI 1.4 TSI 1.4 TSI MultiFuel ↓	63 - 81 92 92	04/14→ 04/14→ 04/14→	←	; +PR 1ZA		**24.3571-1802.5**	**241388**	without holder

	kW				! #			
VW - GOLF SPORTSVAN VII (AM1, AN1) 02/14→								
Brake Caliper								
1.5 TSI	96 - 110	05/17→	←	; +PR 1ZA		24.3571-1801.5	241387	without holder
1.6 1.6 TDI 2.0 TDI	81 66 - 85 81	05/14→ 02/14→ 05/14→11/17	←	; +PR 1ZA		24.3571-1802.5	241388	without holder
1.4 TSI 1.6 TDI 2.0 TDI	110 81 110	02/14→ 02/14→ 02/14→	←	; 05/14→; +PR 1ZA		24.3571-1801.5	241387	without holder
			←	; 05/14→; +PR 1ZA		24.3571-1802.5	241388	without holder
VW - GOLF VAN IV Variant (1J5) 05/99→06/06								
Accessory Kit, disc brake pad								
1.4 1.6 1.9 SDI 1.9 TDI	55 77 50 81 - 96	05/00→06/06 05/00→06/06 05/99→05/06 05/99→05/06	→	→ 10/03; +PR 1KY		13.0460-0516.2	610516	
1.9 TDI	74 - 85	05/99→06/06	→	+PR 1KY		13.0460-0516.2	610516	
VW - GOLF VAN VII Variant (BA5) 04/13→03/17								
Brake Caliper								
1.6 TDi BlueMotion	81	05/13→03/17	←	; +PR 1ZA / 1ZD		24.3571-1801.5	241387	without holder
			←	; +PR 1ZA / 1ZD		24.3571-1802.5	241388	without holder
VW - GRAND CALIFORNIA Camper (SCB, SCC) 04/19→								
Brake Pad Set, disc brake								
2.0 TDI 2.0 TDI 4motion	130 130	04/19→ 04/19→	←	+PR 1LA		13.0460-3886.2	603886	+ WE / - WK + Zub
			→	+PR 1LB		13.0460-3886.2	603886	+ WE / - WK + Zub
VW - NEW BEETLE (9C1, 1C1) 01/98→11/10								
Accessory Kit, disc brake pad								
1.8 T	132	11/01→06/05	→	+PR 1KY		13.0460-0516.2	610516	
2.3 V5	125	10/00→09/10	→	→ 05/05; +PR 1KY		13.0460-0516.2	610516	
VW - PASSAT ALLTRACK B8 Variant (3G5, CB5) 05/15→								
Brake Caliper								
1.4 TSI 4motion 2.0 TDI 4motion 2.0 TSI 4motion	110 110 - 176 162 - 206	05/15→ 05/15→ 07/15→	←	; +PR 1ZA / 1ZD / 1ZK / 1ZL		24.3571-1801.5	241387	without holder
			←	; +PR 1ZA / 1ZD / 1ZK / 1ZL		24.3571-1802.5	241388	without holder
VW - PASSAT B8 (3G2, CB2) 08/14→								
Brake Caliper								
1.4 GTE Hybrid 1.4 TSI 1.4 TSI 4motion 1.5 TSI 1.8 TSI 2.0 TDI 2.0 TDI 4motion 2.0 TSI 2.0 TSI 4motion	115 92 - 110 110 110 132 81 - 147 140 - 147 140 - 162 200 - 206	06/15→11/18 11/14→ 02/15→ 08/18→ 02/15→ 11/14→ 11/14→ 02/15→ 05/15→	←	; +PR 1ZA / 1ZD / 1ZK / 1ZL		24.3571-1801.5	241387	without holder
			←	; +PR 1ZA / 1ZD / 1ZK / 1ZL		24.3571-1802.5	241388	without holder
1.6 TDI 2.0 TDI 4motion	88 110 - 176	08/14→ 08/14→	←	; 11/14→; +PR 1ZA / 1ZD / 1ZK / 1ZL		24.3571-1801.5	241387	without holder
			←	; 11/14→; +PR 1ZA / 1ZD / 1ZK / 1ZL		24.3571-1802.5	241388	without holder
VW - PASSAT B8 Variant (3G5, CB5) 08/14→								
Brake Caliper								
1.4 GTE Hybrid 1.4 TSI 1.4 TSI 4motion 1.5 TSI 1.8 TSI ↓	115 92 - 110 110 110 132	06/15→ 11/14→ 02/15→ 08/18→ 02/15→	←	; +PR 1ZA / 1ZD / 1ZK / 1ZL		24.3571-1801.5	241387	without holder
			←	; +PR 1ZA / 1ZD / 1ZK / 1ZL		24.3571-1802.5	241388	without holder

© 2021 Continental Aftermarket & Services GmbH

	kW				! #			
VW - PASSAT B8 Variant (3G5, CB5) 08/14→								
Brake Caliper								
2.0 TDI	90 - 147	11/14→	←	; +PR 1ZA / 1ZD / 1ZK / 1ZL		**24.3571-1801.5**	**241387**	without holder
2.0 TDI 4motion	140 - 147	11/14→	←	; +PR 1ZA / 1ZD / 1ZK / 1ZL		**24.3571-1802.5**	**241388**	without holder
2.0 TSI	140	11/18→						
2.0 TSI 4motion	200 - 206	05/15→						
1.6 TDI	88	08/14→	←	; 11/14→; +PR 1ZA / 1ZD / 1ZK / 1ZL		**24.3571-1801.5**	**241387**	without holder
2.0 TDI 4motion	110 - 176	08/14→	←	; 11/14→; +PR 1ZA / 1ZD / 1ZK / 1ZL		**24.3571-1802.5**	**241388**	without holder
2.0 TSI	162	08/14→						
VW - POLO (6N2) 10/99→10/01								
Accessory Kit, disc brake pad								
1.4 16V	55	10/99→09/01	→	+ ABS		**13.0460-0516.2**	**610516**	
1.4 TDI	55	10/99→09/01						
1.4 16V	74	10/99→09/01	→	+ D		**13.0460-0516.2**	**610516**	
1.6 16V GTI	92	10/99→09/01	→			**13.0460-0516.2**	**610516**	
VW - POLO III (6N1) 10/94→10/99								
Accessory Kit, disc brake pad								
100 1.4 16V	74	04/96→10/99	→	10/99→; + D		**13.0460-0516.2**	**610516**	
120 1.6 16V GTI	88	09/98→10/99	→	10/99→		**13.0460-0516.2**	**610516**	
VW - POLO III CLASSIC (6V2) 01/95→11/09								
Accessory Kit, disc brake pad								
110 1.9 TDI	81	06/98→01/02	→	10/99→ 09/01		**13.0460-0516.2**	**610516**	
VW - POLO Variant (6V5) 04/97→09/01								
Accessory Kit, disc brake pad								
1.9 TDI	81	06/98→09/01	→			**13.0460-0516.2**	**610516**	
VW - TIGUAN (AD1, AX1) 01/16→								
Brake Caliper								
1.4 eHybrid	110	11/20→	←	; +PR 1ZA / 1ZD		**24.3571-1801.5**	**241387**	without holder
1.4 TSI	92	01/16→07/18						
1.4 TSI 4motion	110	05/16→07/18	←	; +PR 1ZA / 1ZD		**24.3571-1802.5**	**241388**	without holder
1.5 TSI	96 - 110	11/18→						
1.6 TDI	85	05/16→06/20						
2.0 TDI	81 - 90	05/16→						
2.0 TDI 4motion	130 - 176	04/16→						
2.0 TSI 4motion	140 - 180	06/16→						
2.0 TSI R 4motion	235	11/20→						
1.4 TSI	110	01/16→07/18	←	; 05/16→; +PR 1ZA / 1ZD		**24.3571-1801.5**	**241387**	without holder
			←	; 05/16→; +PR 1ZA / 1ZD		**24.3571-1802.5**	**241388**	without holder
2.0 TDI	110	01/16→07/20	←	; 02/16→; +PR 1ZA / 1ZD		**24.3571-1801.5**	**241387**	without holder
2.0 TDI 4motion	110	01/16→07/20						
2.0 TSI 4motion	132	01/16→	←	; 02/16→; +PR 1ZA / 1ZD		**24.3571-1802.5**	**241388**	without holder
VW - TOUAREG (7LA, 7L6, 7L7) 10/02→01/13								
Accessory Kit, disc brake pad								
2.5 R5 TDI	120 - 128	01/03→05/10	←	01/06→; +PR 1LE; → 03/10		**13.0460-0519.2**	**610519**	
3.0 V6 TDI	165	11/04→05/10						
3.6 V6 FSI	206	10/05→05/10						
5.0 V10 TDI	230	10/02→05/10						
3.0 TDI	155	04/06→05/10	←	+PR 1LE; → 03/10		**13.0460-0519.2**	**610519**	
3.0 V6 TDI	176	11/07→05/10						
3.2 V6	162	10/02→11/06	←	11/02→ 12/05; +PR 1LE		**13.0460-0519.2**	**610519**	
3.2 V6	177	11/04→11/06	←	→ 12/05; +PR 1LE		**13.0460-0519.2**	**610519**	
4.2 V8	228	12/02→11/06	←	01/06→; +PR 1LE		**13.0460-0519.2**	**610519**	
4.2 V8 FSI	257	06/06→05/10	←	12/06→ 03/10; +PR 1LE		**13.0460-0519.2**	**610519**	
5.0 R50 TDI	257	08/07→05/10	←	01/08→ 03/10; +PR 1LE		**13.0460-0519.2**	**610519**	
6.0 W12	331	08/04→05/10	←	01/06→; +PR 1LE; → 11/06		**13.0460-0519.2**	**610519**	

	kW				! #			
VW - TOUAREG (7P5, 7P6) 01/10→12/18								
Accessory Kit, disc brake pad								
3.0 V6 TDI	150 - 176	01/10→03/18		04/10→; +PR 1LC / 1LE		**13.0460-0519.2**	**610519**	
4.2 V8 TDI	250	01/10→03/18						
3.0 V6 TDI	165 - 193	06/10→03/18		+PR 1LC / 1LE		**13.0460-0519.2**	**610519**	
3.0 V6 TSI Hybrid	245	04/10→03/18						
3.6 V6 FSI	183 - 206	04/10→03/18						
4.2 V8 FSI	265	01/11→03/18						
VW - TOUAREG VAN (7P5) 01/10→12/18								
Accessory Kit, disc brake pad								
3.0 TDI 4motion	180	05/11→12/14		+PR 1LC / 1LE		**13.0460-0519.2**	**610519**	
VW - TOURAN (5T1) 05/15→								
Brake Caliper								
1.0 TSI	85	12/18→		; +PR 1ZA / 1ZD		**24.3571-1801.5**	**241387**	without holder
1.5 TSI	110	11/18→						
1.6 TDI	85	05/16→		; +PR 1ZA / 1ZD		**24.3571-1802.5**	**241388**	without holder
1.8 TSI	132	11/15→						
2.0 TDI	81 - 140	11/15→						
1.2 TSI	81	05/15→		; 09/15→; +PR 1ZA / 1ZD		**24.3571-1801.5**	**241387**	without holder
1.4 TSI	110	05/15→						
1.6 TDI	81	05/15→05/16		; 09/15→; +PR 1ZA / 1ZD		**24.3571-1802.5**	**241388**	without holder
2.0 TDI	110	05/15→						
VW - T-ROC (A11) 07/17→								
Brake Caliper								
1.0 TSI	81 - 85	07/17→		; +PR 1ZA / 1ZK / 1ZL		**24.3571-1801.5**	**241387**	without holder
1.5 TSI	110	11/17→		; +PR 1ZA / 1ZK / 1ZL		**24.3571-1802.5**	**241388**	without holder
1.5 TSI 4motion	110	05/18→						
1.6 TDI	85	03/18→						
2.0 R 4motion	221	09/19→						
2.0 TDI	110	03/18→						
2.0 TDI 4motion	110 - 140	09/17→						
2.0 TDI SCR	85	11/20→						
2.0 TSI 4motion	140	07/17→						
VW - T-ROC Cabriolet (AC7) 12/19→								
Brake Caliper								
1.0 TSI	81 - 85	12/19→		; +PR 1ZK		**24.3571-1801.5**	**241387**	without holder
1.5 TSI	110	12/19→		; +PR 1ZK		**24.3571-1802.5**	**241388**	without holder

© 2021 Continental Aftermarket & Services GmbH

EN Technical translations

DE Technische Übersetzungen

ES Traducciones tecnicas

FR Traductions techniques

IT Traduzioni tecniche

10/2021

© 2021 Continental Aftermarket & Services GmbH

Technical translations

Technische Übersetzungen - Traducciones tecnicas - Traductions techniques - Traduzioni tecniche

EN	
	Brake Master Cylinder
	Brake Pad Set, disc brake
	Wheel Speed Sensor
	Brake Caliper
	Brake Disc
	Rear Axle Left
	Rear Axle Right
	Front Axle Left
	Front Axle Right
+ ABS	for vehicles with ABS
+ ABS Ring	with ABS sensor ring
+ D	Germany
+ eFSB	for vehicles with electric parking brake
+ ESP	for vehicles with ESP
+ FSB	Brake Caliper with integrated parking brake
+POC	for POC
+PR	for PR number
+ RLG	with wheel bearing
+ S	with bolts/screws
+SA	for SA code
+ WE	prepared for wear indicator
+ WK	with acoustic wear warning
+ Zub	with accessories
11Q	11Q
12Q	12Q
14Q	14Q
15Q	15Q
17"	17"

EN	
Accessory Kit, brake shoes	Accessory Kit, brake shoes
Accessory Kit, disc brake pad	Accessory Kit, disc brake pad
Accessory Kit, parking brake shoes	Accessory Kit, parking brake shoes
ADV	Brake System, Advics
ALU	Aluminium
ATE Ceramic	additional article information, ATE Ceramic
B	Coated
Bolt Hole Circle Ø [mm]	Bolt Hole Circle Ø [mm]
Bore Ø [mm]	Bore Ø [mm]
Brake Caliper	Brake Caliper
Brake Disc	Brake Disc
Brake Disc Thickness [mm]	Brake Disc Thickness [mm]
Brake Master Cylinder	Brake Master Cylinder
Brake Pad Set, disc brake	Brake Pad Set, disc brake
Brake Size	Brake Size
BRE	Brake System, Brembo
Cast Iron	Cast Iron
Centering Diameter [mm]	Centering Diameter [mm]
Disc Brake	Disc Brake
for right-hand drive vehicles	for right-hand drive vehicles
for vehicles with four wheel steering	for vehicles with four wheel steering

© 2021 Continental Aftermarket & Services GmbH

Technical translations

Technische Übersetzungen - Traducciones tecnicas - Traductions techniques - Traduzioni tecniche

EN	
for vehicles with increased ground clearance	for vehicles with increased ground clearance
for vehicles without M-sport brakes	for vehicles without M-sport brakes
for vehicles with towbar	for vehicles with towbar
Generic article	Generic article
HC	High-carbon
Height [mm]	Height [mm]
Information Type	Information Type
L=	Length [mm]
L=	Cable Length [mm]
L1=	Length 1 [mm]
Machining	Machining
Minimum thickness [mm]	Minimum thickness [mm]
not for face-lift	not for facelift
Number of Holes	Number of Holes
Payload [kg]	Payload [kg]
Payload code	Payload code
Payload from [kg]	Payload from [kg]
Payload to [kg]	Payload to [kg]
Piston Diameter [mm]	Piston Diameter [mm]
Piston diameter 1 [mm]	Piston diameter 1 [mm]
Piston diameter 2 [mm]	Piston diameter 2 [mm]
Sensor, wheel speed	Sensor, wheel speed
Service exchange part	Service exchange part

EN	
Support plate diameter [mm]	Support plate diameter [mm]
Surface	Surface
Thickness [mm]	Thickness [mm]
TRW	Brake System, Lucas / TRW
Type	Type
Warning Contact, brake pad wear	Warning Contact, brake pad wear
Width [mm]	Width [mm]
with anti-squeak plate	with anti-squeak plate
with brake caliper screws	with brake caliper screws
without brake fluid reservoir	without brake fluid reservoir
- WK	excl. wear warning contact
x	Number of connectors
Ø	Diameter [mm] Inner diameter [mm] Outer diameter [mm]
→	Construction year from Vehicle Identification Number from
→	Construction year to Vehicle Identification Number to
→Orga	RPO number to

© 2021 Continental Aftermarket & Services GmbH

Technical translations

Technische Übersetzungen - Traducciones tecnicas - Traductions techniques - Traduzioni tecniche

DE	
	Hauptbremszylinder
	Bremsbelagsatz, Scheibenbremse
	Raddrehzahlsensor
	Bremssattel
	Bremsscheibe
	Hinterachse links
	Hinterachse rechts
	Vorderachse links
	Vorderachse rechts
+ ABS	für Fahrzeuge mit ABS
+ ABS Ring	mit ABS-Sensorring
+ D	Deutschland
+ eFSB	für Fahrzeuge mit elektrischer Feststell-bremse
+ ESP	für Fahrzeuge mit ESP
+ FSB	Bremssattel m. integr. Feststellbremse
+POC	für POC
+PR	für PR-Nummer
+ RLG	mit Radlager
+ S	mit Schrauben
+SA	für SA Code
+ WE	für Verschleißwarnanzeiger vorbereitet
+ WK	mit akustischer Verschleißwarnung
+ Zub	mit Zubehör
11Q	11Q
12Q	12Q
14Q	14Q
15Q	15Q
17"	17"

DE	
Accessory Kit, brake shoes	Zubehörsatz, Bremsbacken
Accessory Kit, disc brake pad	Zubehörsatz, Scheibenbremsbelag
Accessory Kit, parking brake shoes	Zubehörsatz, Feststellbremsbacken
ADV	Bremssystem, Advics
ALU	Aluminium
ATE Ceramic	Artikelzusatzbezeichnung, ATE Ceramic
B	beschichtet
Bolt Hole Circle Ø [mm]	Lochkreis-Ø [mm]
Bore Ø [mm]	Bohrung-Ø [mm]
Brake Caliper	Bremssattel
Brake Disc	Bremsscheibe
Brake Disc Thickness [mm]	Bremsscheibendicke [mm]
Brake Master Cylinder	Hauptbremszylinder
Brake Pad Set, disc brake	Bremsbelagsatz, Scheibenbremse
Brake Size	Bremsengröße
BRE	Bremssystem, Brembo
Cast Iron	Gusseisen
Centering Diameter [mm]	Zentrierungsdurchmesser [mm]
Disc Brake	Scheibenbremse
for right-hand drive vehicles	für Rechtslenker
for vehicles with four wheel steering	für Fahrzeuge mit Vierradlenkung

© 2021 Continental Aftermarket & Services GmbH

Technical translations

Technische Übersetzungen - Traducciones tecnicas - Traductions techniques - Traduzioni tecniche

DE	
for vehicles with increased ground clearance	für Fahrzeuge mit erhöhter Bodenfreiheit
for vehicles without M-sport brakes	für Fahrzeuge ohne M-Sportbremse
for vehicles with towbar	für Fahrzeuge mit Anhängevorrichtung
Generic article	Generischer Artikel
HC	hochgekohlt
Height [mm]	Höhe [mm]
Information Type	Informationsart
L=	Länge [mm]
L=	Kabellänge [mm]
L1=	Länge 1 [mm]
Machining	Bearbeitung
Minimum thickness [mm]	Mindestdicke [mm]
not for facelift	nicht für Facelift
Number of Holes	Lochanzahl
Payload [kg]	Nutzlast [kg]
Payload code	Nutzlast-Code
Payload from [kg]	Nutzlast ab [kg]
Payload to [kg]	Nutzlast bis [kg]
Piston Diameter [mm]	Kolbendurchmesser [mm]
Piston diameter 1 [mm]	Kolbendurchmesser 1 [mm]
Piston diameter 2 [mm]	Kolbendurchmesser 2 [mm]
Sensor, wheel speed	Sensor, Raddrehzahl
Service exchange part	Austauschteil

DE	
Support plate diameter [mm]	Durchmesser Aufnahme [mm]
Surface	Oberfläche
Thickness [mm]	Dicke/Stärke [mm]
TRW	Bremssystem, Lucas / TRW
Type	Baumuster
Warning Contact, brake pad wear	Warnkontakt, Bremsbelagverschleiß
Width [mm]	Breite [mm]
with anti-squeak plate	mit Anti-Quietsch-Blech
with brake caliper screws	mit Bremssattelschrauben
without brake fluid reservoir	ohne Bremsflüssigkeitsbehälter
- WK	exkl. Verschleißwarnkontakt
x	Anschlussanzahl
Ø	Durchmesser [mm] Innendurchmesser [mm] Außendurchmesser [mm]
→	Baujahr ab Fahrgestellnummer ab
→	Baujahr bis Fahrgestellnummer bis
→**Orga**	Organisationsnummer bis

© 2021 Continental Aftermarket & Services GmbH

Technical translations

Technische Übersetzungen - Traducciones tecnicas - Traductions techniques - Traduzioni tecniche

ES	
	Cilindro principal de freno
	Juego de pastillas de freno
	Sensor de velocidad de la rueda
	Pinza de freno
	Disco de freno
	Eje trasero izquierda
	Eje trasero, derecha
	Eje delantero, izquierda
	Eje delantero, derecha
+ ABS	para vehículos con ABS
+ ABS Ring	con anillo sensor ABS
+ D	Alemania
+ eFSB	para vehículos con freno de estaciona-miento electrónico
+ ESP	para vehículos con ESP
+ FSB	Pinza con freno estacionamiento inte-grado
+POC	para POC
+PR	Número de PR
+ RLG	con cojinete rueda
+ S	con tornillos
+SA	para código SA
+ WE	preparado para indicador desgaste
+ WK	con avisador acústico de desgaste
+ Zub	con accesorios
11Q	11Q
12Q	12Q
14Q	14Q
15Q	15Q
17"	17"

ES	
Accessory Kit, brake shoes	Juego de accesorios, zapatas de freno
Accessory Kit, disc brake pad	Kit de accesorios, pastillas de frenos
Accessory Kit, parking brake shoes	Juego de accesorios, zapatas de freno de estacionamiento
ADV	Sistema de frenos, Advics
ALU	Aluminio
ATE Ceramic	Denominación adicional del artículo, ATE Ceramic
B	revestido
Bolt Hole Circle Ø [mm]	corona de agujeros - Ø [mm]
Bore Ø [mm]	Taladro Ø [mm]
Brake Caliper	Pinza de freno
Brake Disc	Disco de freno
Brake Disc Thickness [mm]	Espesor de disco de frenos [mm]
Brake Master Cylinder	Cilindro principal de freno
Brake Pad Set, disc brake	Juego de pastillas de freno
Brake Size	Tamaño freno
BRE	Sistema de frenos, Brembo
Cast Iron	Hierro fundido
Centering Diameter [mm]	Diámetro de centrado [mm]
Disc Brake	Discos
for right-hand drive vehicles	para vehíc. dirección a la derecha
for vehicles with four wheel steering	para vehículos con dirección en las 4 ruedas

© 2021 Continental Aftermarket & Services GmbH

Technical translations

Technische Übersetzungen - Traducciones tecnicas - Traductions techniques - Traduzioni tecniche

ES	
for vehicles with increased ground clearance	para vehículos con altura libre aumentada
for vehicles without M-sport brakes	Para vehículos sin frenos deportivos M
for vehicles with towbar	para vehículos con enganche de remolque
Generic article	Número de artículo genérico
HC	altamente carbonizado
Height [mm]	Altura [mm]
Information Type	Tipo información
L=	Longitud [mm]
L=	Longitud de cable [mm]
L1=	Longitud 1 [mm]
Machining	Procesamiento
Minimum thickness [mm]	Espesor mínimo [mm]
not for face-lift	no para facelift
Number of Holes	Número de orificios
Payload [kg]	Carga útil [kg]
Payload code	Código de carga útil
Payload from [kg]	carga útil desde [kg]
Payload to [kg]	carga útil hasta [kg]
Piston Diameter [mm]	Diámetro del pistón [mm]
Piston diameter 1 [mm]	Diámetro del pistón 1 [mm]
Piston diameter 2 [mm]	Diámetro del pistón 2 [mm]
Sensor, wheel speed	Sensor, revoluciones de la rueda
Service exchange part	Pieza de intercambio

ES	
Support plate diameter [mm]	Diámetro alojamiento [mm]
Surface	Superficie
Thickness [mm]	Espesor [mm]
TRW	Sistema de frenos, Lucas / TRW
Type	Tipo
Warning Contact, brake pad wear	Contacto de aviso, desgaste de los frenos
Width [mm]	Ancho [mm]
with anti-squeak plate	Chapa antichirridos
with brake caliper screws	con tornillos pinza freno
without brake fluid reservoir	sin depósito líquido frenos
- WK	excl. contacto de avisador de desgaste
x	Número de conexiones
Ø	Diámetro [mm] Diámetro interior [mm] Diámetro exterior [mm]
→	año construcción desde nº de chasis desde
→	año construcción hasta nº de chasis hasta
→Orga	nº de organización hasta

© 2021 Continental Aftermarket & Services GmbH

Technical translations

Technische Übersetzungen - Traducciones tecnicas - Traductions techniques - Traduzioni tecniche

FR	
	Maître-cylindre de frein
	Kit de plaquettes de frein, frein à disque
	Capteur de vitesse de roue
	Étrier de frein
	Disque de frein
	Essieu arrière gauche
	Essieu arrière droit
	Essieu avant gauche
	Essieu avant droit
+ ABS	pour véhicules avec système antiblo-cage
+ ABS Ring	avec bague ABS
+ D	Allemagne
+ eFSB	pour véhicules avec frein d'arrêt élec-trique
+ ESP	pour véhicules avec ESP
+ FSB	Étrier de frein avec frein de stationne-ment intégré
+POC	pour POC
+PR	pour numéro PR
+ RLG	avec roulement de roue
+ S	avec vis/boulons
+SA	pour SA code
+ WE	préparé pour indicateur d'usure
+ WK	avec indicateur d'usure
+ Zub	avec accessoires
11Q	11Q
12Q	12Q
14Q	14Q
15Q	15Q
17"	17"

FR	
Accessory Kit, brake shoes	Kit d'accessoires, mâchoire de frein
Accessory Kit, disc brake pad	Kit d'accessoires, plaquette de frein à disque
Accessory Kit, parking brake shoes	Kit d'accessoires, mâchoires de frein de stationnement
ADV	Système de freinage, Advics
ALU	Aluminium
ATE Ceramic	Designation d'article complémentaire, ATE Ceramic
B	revêtu
Bolt Hole Circle Ø [mm]	Cercle de percage -Ø [mm]
Bore Ø [mm]	Alésage-Ø
Brake Caliper	Étrier de frein
Brake Disc	Disque de frein
Brake Disc Thickness [mm]	Épaisseur du disque de frein [mm]
Brake Master Cylinder	Maître-cylindre de frein
Brake Pad Set, disc brake	Kit de plaquettes de frein, frein à disque
Brake Size	Dimension des freins
BRE	Système de freinage, Brembo
Cast Iron	Fonte
Centering Diameter [mm]	Diamètre du centrage [mm]
Disc Brake	Frein à disque
for right-hand drive vehicles	pour véhicules avec direction à droite
for vehicles with four wheel steering	pour véhicules avec direction par quatre roues

© 2021 Continental Aftermarket & Services GmbH

Technical translations

Technische Übersetzungen - Traducciones tecnicas - Traductions techniques - Traduzioni tecniche

FR	
for vehicles with increased ground clearance	pour véhicules avec garde au sol augmentée
for vehicles without M-sport brakes	pour véhicules sans système de freinage sport M
for vehicles with towbar	pour véhicules avec attelage de remorque
Generic article	Référence générique de l'article
HC	à haute teneur en carbone
Height [mm]	Hauteur [mm]
Information Type	Genre d'information
L=	Longueur [mm]
L=	Longueur de câble [mm]
L1=	Longueur 1 [mm]
Machining	Traitement
Minimum thickness [mm]	Épaisseur minimum [mm]
not for facelift	pas pour facelift
Number of Holes	Nombre de trous
Payload [kg]	Charge utile [kg]
Payload code	Code de charge utile
Payload from [kg]	Charge utile à partir de [kg]
Payload to [kg]	Charge utile jusqu'à [lb]
Piston Diameter [mm]	Diamètre du piston [mm]
Piston diameter 1 [mm]	Diamètre du piston 1 [mm]
Piston diameter 2 [mm]	Diamètre du piston 2 [mm]
Sensor, wheel speed	Capteur, vitesse de roue
Service exchange part	Echange standard

FR	
Support plate diameter [mm]	Diamètre réception [mm]
Surface	Surface
Thickness [mm]	Épaisseur [mm]
TRW	Système de freinage, Lucas / TRW
Type	Modèle
Warning Contact, brake pad wear	Contact d'avertissement, usure des plaquettes de frein
Width [mm]	Largeur [mm]
with anti-squeak plate	avec tôle anti-bruit
with brake caliper screws	avec vis d'étrier de frein
without brake fluid reservoir	sans réservoir du liquide de frein
- WK	contact de signal d'usure exclu
x	Nombre de connexions
Ø	Diamètre [mm] Diamètre intérieur [mm] Diamètre extérieur [mm]
→	Année à partir de Nº de châssis à partir de
→	Année jusqu'à Nº de châssis jusqu'à
→Orga	Nº d'organisation jusqu'à

© 2021 Continental Aftermarket & Services GmbH

Technical translations

Technische Übersetzungen - Traducciones tecnicas - Traductions techniques - Traduzioni tecniche

IT	
	Cilindro maestro del freno
	Kit pastiglie freno, Freno a disco
	Sensore velocità ruote
	Pinza freno
	Discofreno
	Assale posteriore Sx
	Assale posteriore Dx
	Assale anteriore Sx
	Assale anteriore Dx
+ ABS	per veicoli con ABS
+ ABS Ring	con anello sensore ABS
+ D	Germania
+ eFSB	per veicoli con freno stazionamento elettrico
+ ESP	per veicoli con ESP
+ FSB	Pinza freno con freno-stazionamento integrato
+POC	per POC
+PR	per N° PR
+ RLG	con cuscinetto ruota
+ S	con bulloni/viti
+SA	per codice SA
+ WE	Predisposto per contatto segnalazione usura
+ WK	con segnalatore acustico usura
+ Zub	con accessori
11Q	11Q
12Q	12Q
14Q	14Q
15Q	15Q
17"	17"

IT	
Accessory Kit, brake shoes	Kit accessori, Ganasce freno
Accessory Kit, disc brake pad	Kit accessori, Pastiglia freno
Accessory Kit, parking brake shoes	Kit accessori, Ganasce freno staziona-mento
ADV	Sistema frenante, Advics
ALU	Alluminio
ATE Ceramic	Denominazione aggiuntiva dell'articolo, ATE Ceramic
B	rivestito
Bolt Hole Circle Ø [mm]	Cerchio foro-Ø [mm]
Bore Ø [mm]	Alesaggio-Ø [mm]
Brake Caliper	Pinza freno
Brake Disc	Discofreno
Brake Disc Thickness [mm]	Spessore disco freno [mm]
Brake Master Cylinder	Cilindro maestro del freno
Brake Pad Set, disc brake	Kit pastiglie freno, Freno a disco
Brake Size	Misura freno
BRE	Sistema frenante, Brembo
Cast Iron	Ghisa
Centering Diameter [mm]	Diametro centraggio [mm]
Disc Brake	Freno a disco
for right-hand drive vehicles	per veicolo con guida a Dx
for vehicles with four wheel steering	per veicoli con quattro ruote sterzanti

© 2021 Continental Aftermarket & Services GmbH

Technical translations

Technische Übersetzungen - Traducciones tecnicas - Traductions techniques - Traduzioni tecniche

IT	
for vehicles with increased ground clearance	per veicoli con altezza da terra maggiorata
for vehicles without M-sport brakes	per veicoli senza freni sportivi M
for vehicles with towbar	per veicoli con gancio traino
Generic article	Numero generico dell'articolo
HC	ad alto tenore di carbonio
Height [mm]	Altezza [mm]
Information Type	Tipo informazione
L=	Lunghezza [mm]
L=	Lunghezza cavo [mm]
L1=	Lunghezza 1 [mm]
Machining	Lavorazione/Trattamento
Minimum thickness [mm]	Spessore min. [mm]
not for face-lift	non per Facelift
Number of Holes	N° fori
Payload [kg]	Portatautile [kg]
Payload code	Codice portata utile
Payload from [kg]	Portata utile da [kg]
Payload to [kg]	Portata utile fino a [kg]
Piston Diameter [mm]	Diametro pistone [mm]
Piston diameter 1 [mm]	Diametro pistone 1 [mm]
Piston diameter 2 [mm]	Diametro pistone 2 [mm]
Sensor, wheel speed	Sensore, N° giri ruota
Service exchange part	Ricambio di rotazione

IT	
Support plate diameter [mm]	Diametro sede [mm]
Surface	Superficie
Thickness [mm]	Spessore [mm]
TRW	Sistema frenante, Lucas / TRW
Type	Modello
Warning Contact, brake pad wear	Contatto segnalazione, Usura past. freno/mat. d'attrito
Width [mm]	Larghezza [mm]
with anti-squeak plate	con lamierino anticigolío
with brake caliper screws	con bulloni pinza freno
without brake fluid reservoir	senza serbatoio liquido freni
- WK	senza contatto segnalazione usura
x	N° raccordi
Ø	Diametro [mm] Diametro interno [mm] Diametro esterno [mm]
→	Anno da N° telaio da
→	Anno fino a N° telaio fino a
→**Orga**	N° organizzazione fino a

© 2021 Continental Aftermarket & Services GmbH

Notes

© 2021 Continental Aftermarket & Services GmbH

ATE – A Trademark of the Continental Corporation

Continental Aftermarket & Services GmbH

Sodener Straße 9
D-65824 Schwalbach
Tel. +49 (0) 6196 87 0
Fax +49 (0) 6196 865 71

www.ate.de

Continental Automotive Trading Italia S.r.l.

Segmento IAM – ATE
Via G. Matteotti, 62
I-20092 Cinisello Balsamo (MI)
Tel. +39 02 35680 1
Fax +39 02 35680 325
E-Mail: supporto@ continental-corporation.com

www.ate-freni.it

Continental Automotive France SAS

6 rue Jean Moulin
F-78120 Rambouillet
Tél. +33 (0) 9 69 37 37 37
E-Mail: 07GYFMAte-technique@ continental-corporation.com

www.ate-freinage.fr

Continental Automotive Spain, S.A.

C/ Sepúlveda, 11
E-28108 Alcobendas (Madrid)
Tel. +34 (0) 91 657 21 21
Fax +34 (0) 91 657 21 49

www.frenos-ate.es