ATE New Parts
ATE Neuteile

07/2021

Brakethrough Technology

Erstklassig
First-class

Besser ist besser

Wenn es um Qualität geht, genügt uns ein „sehr gut“ noch lange nicht. Wir erfüllen hohe Ansprüche an das Qualitätsmanagement und die europäische Sicherheitsnorm ECE-R90 wird von ATE sogar übertroffen. Zudem führen wir zahlreiche zusätzliche Tests durch, unter anderem zu Verschleiß und Wärmeleistung.

Auch Nachhaltigkeit ist uns wichtig: Wir stellen die Mischungen für ATE Bremsbeläge auf kupferfreie Materialien um und setzen bei ATE Ceramic auf geringen Abrieb. Nutzen ausschließlich umweltfreundliches Material für die Beschichtung von Bremsscheiben. Und bereiten Produkte wie Bremssättel wieder auf.

Better is better

When it comes to quality, “very good” is simply not good enough for us. We meet high standards of quality management – and ATE even exceeds the European safety standard ECE-R90. We also perform many additional tests, including wear and thermal performance.

Sustainability is also important to us: we convert the compounds for ATE brake pads to copperfree materials and opt for low abrasion with ATE Ceramic. We only use environmentally friendly material for the coating of brake discs – and we remanufacture products like brake callipers.

© 2021 Continental Aftermarket & Services GmbH

EN Product details

DE Produktdetails

ES Descripción del producto

FR Présentation du produit

IT Panoramica prodotti

07/2021

© 2021 Continental Aftermarket & Services GmbH

03.7750-6234.4 300320

Brake Booster

Ø 9"

T52

Pneumatic

ATE

PEUGEOT

03.7853-2604.4 300322

Brake Booster

Ø 9"

T52

Pneumatic

ATE

PEUGEOT

03.7853-2704.4 300323

Brake Booster

Ø 9"

T52

Pneumatic

ATE

PEUGEOT

13.0460-3884.2 603884

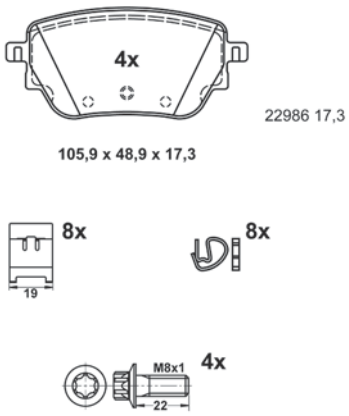

Brake Pad Set, disc brake

Thickness [mm] 17.3

Width [mm] 105.9

Height [mm] 48.9

- WE / - WK

+ Zub

with brake caliper screws

MERCEDES-BENZ

© 2021 Continental Aftermarket & Services GmbH

13.0460-3885.2 603885

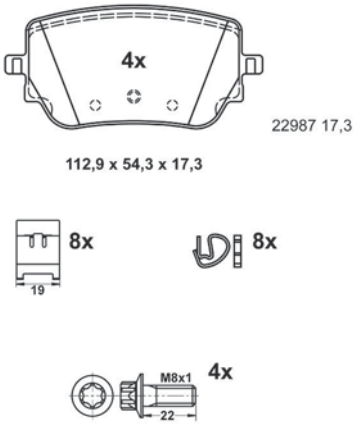

Brake Pad Set, disc brake

Thickness [mm] 17.3

Width [mm] 112.9

Height [mm] 54.3

- WE / - WK

+ Zub

with brake caliper screws

MERCEDES-BENZ

13.0460-5697.2 605697

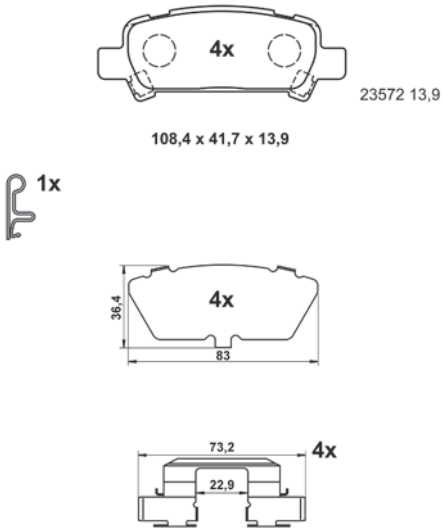

Brake Pad Set, disc brake

Thickness [mm] 13.9

Width [mm] 108.4

Height [mm] 41.7

+ WK

+ Zub

AKE

with anti-squeak plate

SUBARU

13.0470-3885.2 LD3885

ATE Ceramic

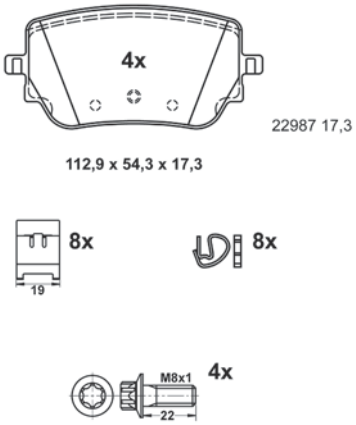

Brake Pad Set, disc brake

Thickness [mm] 17.3

Width [mm] 112.9

Height [mm] 54.3

- WE / - WK

+ Zub

with brake caliper screws

MERCEDES-BENZ

© 2021 Continental Aftermarket & Services GmbH

24.0122-0312.1 422312

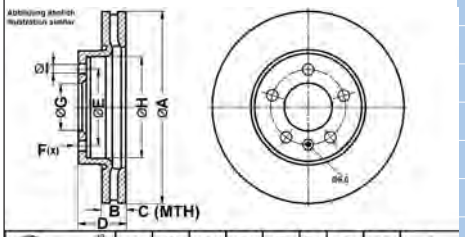

A	B	C	D	E	F(x)	G	H	I
256,0	22,0	19,0	44,1	100,0	5	65,0	134,0	15,5

Brake Disc

Height [mm] 44.1

Bore Ø [mm] 15.5

Vented

Brake Disc Thickness [mm] 22

Minimum thickness [mm] 19

Machining: HC L

Ø 134

Ø 256

Number of Holes: 5

Centering Diameter [mm]: 65

Bolt Hole Circle Ø [mm]: 100

SurfaceB

+ S

AUDI, SEAT, SKODA, VW

24.0710-2038.3 360559

Wheel Speed Sensor

L= 690

L= 598

RENAULT

24.0710-2039.3 360560

Wheel Speed Sensor

L= 1,755

L= 1,662

FIAT

24.0710-2040.3 360561

Wheel Speed Sensor

L= 825

L= 729

CITROËN, PEUGEOT

© 2021 Continental Aftermarket & Services GmbH

24.0710-2041.3 360562

Wheel Speed Sensor

L= 886

L= 796

RENAULT

24.0710-2042.3 360563

Wheel Speed Sensor

L= 505

L= 451

DACIA, RENAULT

24.0710-2043.3 360564

Wheel Speed Sensor

L= 534

L= 450

DACIA, RENAULT

24.0710-2044.3 360565

Wheel Speed Sensor

L= 825

L= 729

PEUGEOT

24.0710-2045.3 360566

Wheel Speed Sensor

L= 965

L= 866

VW

© 2021 Continental Aftermarket & Services GmbH

24.0710-2046.3 360567

Wheel Speed Sensor

L= 54

without cable

FORD

24.0710-2047.3 360568

Wheel Speed Sensor

L= 1,066

L= 983

CHRYSLER, FIAT, LANCIA

24.0710-2048.3 360569

Wheel Speed Sensor

L= 134

L= 575

L= 485

MINI

24.0710-2049.3 360570

Wheel Speed Sensor

L= 965

L= 848

MINI

24.0710-2050.3 360571

Wheel Speed Sensor

L= 1,034

L= 952

FIAT, LANCIA

© 2021 Continental Aftermarket & Services GmbH

24.0710-2051.3 360572

Wheel Speed Sensor

L= 1,460

L= 1,383

MERCEDES-BENZ

24.0710-2052.3 360573

Wheel Speed Sensor

L= 1,710

L= 1,637

RENAULT

24.0710-2053.3 360574

Wheel Speed Sensor

L= 750

L= 646

MERCEDES-BENZ

24.0710-2054.3 360575

Wheel Speed Sensor

L= 695

L= 578

BMW

24.0710-2058.3 360579

Wheel Speed Sensor

L= 790

L= 705

BMW

© 2021 Continental Aftermarket & Services GmbH

24.0710-2059.3 360580

Wheel Speed Sensor

L= 675

L= 565

BMW, PORSCHE

24.0710-2060.3 360581

Wheel Speed Sensor

L= 992

L= 872

BMW

24.0710-2061.3 360582

Wheel Speed Sensor

L= 154

L= 900

L= 570

MINI

24.0710-2062.3 360583

Wheel Speed Sensor

L= 725

L= 605

MINI

24.0710-2063.3 360584

Wheel Speed Sensor

L= 960

L= 840

BMW

© 2021 Continental Aftermarket & Services GmbH

24.0710-2064.3 360585

Wheel Speed Sensor

L= 950

L= 830

BMW

24.0710-2065.3 360586

Wheel Speed Sensor

L= 1,285

L= 1,219

FIAT

24.0710-2066.3 360587

Wheel Speed Sensor

L= 1,256

L= 1,190

FIAT

24.0710-2067.3 360588

Wheel Speed Sensor

L= 937

L= 839

BMW, PORSCHE

24.0710-2081.3 360602

Wheel Speed Sensor

L= 953

L= 845

BMW

© 2021 Continental Aftermarket & Services GmbH

24.0710-2082.3 360603

Wheel Speed Sensor

L= 950

L= 855

MERCEDES-BENZ

24.0710-2083.3 360604

Wheel Speed Sensor

L= 885

L= 807

MERCEDES-BENZ

24.0710-2084.3 360605

Wheel Speed Sensor

L= 795

L= 700

MERCEDES-BENZ

24.0710-5068.3 360537

Wheel Speed Sensor

L= 675

MERCEDES-BENZ

24.3324-1702.5 241280

Brake Caliper

Piston Diameter [mm]: 32

Service exchange part

without holder

MAZDA

© 2021 Continental Aftermarket & Services GmbH

24.8190-0806.2 620806

Warning Contact, brake pad wear

L= 257

Disc Brake

AUDI

24.8190-0807.2 620807

Warning Contact, brake pad wear

L= 656

Disc Brake

BMW, MINI

24.8190-0809.2 620809

Warning Contact, brake pad wear

L= 307

Disc Brake

AUDI

24.8190-0810.2 620810

Warning Contact, brake pad wear

L= 798

Disc Brake

BMW

24.8190-0989.2 620989

Warning Contact, brake pad wear

L= 361

Disc Brake

AUDI

© 2021 Continental Aftermarket & Services GmbH

83.7715-0473.3 331537

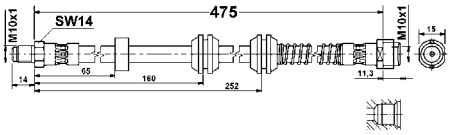

Brake Hose

L= 475

Spanner size 1 [mm]: 14

MERCEDES-BENZ

© 2021 Continental Aftermarket & Services GmbH

EN Applications of vehicles

DE Fahrzeugverwendungen

ES Aplicaciones

FR Applications

IT Applicazioni autoveicoli

07/2021

© 2021 Continental Aftermarket & Services GmbH

	kW				! #			
AUDI - A1 CITY CARVER (GBH) 07/19→								
Brake Disc								
25 TFSI	70	07/19→		+PR 1ZG		**24.0122-0312.1**	**422312**	Ø 256
30 TFSI	81 - 85	07/19→						Brake Disc Thickness [mm] 22
								Minimum thickness [mm] 19
35 TFSI	110	07/19→						Vented + S
AUDI - A1 Sportback (GBA) 07/18→								
Brake Disc								
25 TFSI	70	11/18→		+PR 1ZG		**24.0122-0312.1**	**422312**	Ø 256
30 TFSI	81 - 85	07/18→						Brake Disc Thickness [mm] 22
								Minimum thickness [mm] 19
35 TFSI	110	09/18→						Vented + S
40 TFSI	147	09/18→						
AUDI - A6 C7 (4G2, 4GC) 11/10→09/18								
Warning Contact, brake pad wear								
1.8 TFSI	140	09/14→09/18		+PR 1LP	1	**24.8190-0989.2**	**620989**	
2.0 TDI	100 - 140	01/12→09/18						
2.0 TDI quattro	140	04/15→09/18						
2.0 TFSI	132 - 185	05/11→09/18						
2.0 TFSI hybrid	155	11/11→09/18						
2.0 TFSI quattro	155 - 185	05/12→09/18						
2.1 TDI	140	01/15→09/18						
2.8 FSI quattro	162	09/14→09/18						
3.0 TDI	155 - 160	09/14→09/18						
3.0 TDI quattro	155 - 240	09/14→09/18						
3.0 TFSI quattro	245	09/14→09/18						
S6 quattro	331	10/14→09/18						
2.0 TDI	120 - 130	03/11→09/18		04/11→; +PR 1LP	1	**24.8190-0989.2**	**620989**	
2.0 TFSI	155	03/11→05/13						
2.8 FSI	150	11/10→04/15						
2.8 FSI quattro	150	11/10→04/15						
3.0 TDI	150	11/10→09/18						
3.0 TDI quattro	150 - 180	03/11→09/18						
3.0 TFSI quattro	220 - 228	11/10→09/18						
2.0 TFSI	162	05/13→09/18		09/14→; +PR 1LP	1	**24.8190-0989.2**	**620989**	
3.0 TDI quattro	230	11/11→09/18		12/11→; +PR 1LP	1	**24.8190-0989.2**	**620989**	
S6 quattro	309	02/12→09/18		04/12→; +PR 1LP	1	**24.8190-0989.2**	**620989**	
AUDI - A6 C7 Avant (4G5, 4GD) 05/11→09/18								
Warning Contact, brake pad wear								
1.8 TFSI	140	09/14→09/18		+PR 1LP	1	**24.8190-0989.2**	**620989**	
2.0 TDI	100 - 140	01/12→09/18						
2.0 TDI quattro	140	04/15→09/18						
2.0 TFSI	132 - 185	06/11→09/18						
2.0 TFSI quattro	183 - 185	05/15→09/18						
2.8 FSI quattro	162	09/14→09/18						
3.0 TDI	155 - 160	09/14→09/18						
3.0 TDI quattro	155 - 240	09/14→09/18						
3.0 TFSI quattro	228 - 245	11/11→09/18						
S6 quattro	331	10/14→09/18						
2.0 TDI	120 - 130	05/11→09/18		09/11→; +PR 1LP	1	**24.8190-0989.2**	**620989**	
2.8 FSI	150	05/11→04/15						
2.8 FSI quattro	150	05/11→04/15						
3.0 TDI	150	05/11→09/18						
3.0 TDI quattro	150 - 180	05/11→09/18						
3.0 TFSI quattro	220	05/11→05/12						
3.0 TDI quattro	230	11/11→09/18		12/11→; +PR 1LP	1	**24.8190-0989.2**	**620989**	
S6 quattro	309	02/12→09/18		04/12→; +PR 1LP	1	**24.8190-0989.2**	**620989**	

© 2021 Continental Aftermarket & Services GmbH

	kW				! #			
AUDI - A7 Sportback (4GA, 4GF) 07/10→05/18								
Warning Contact, brake pad wear								
1.8 TFSI 2.0 TFSI 2.0 TFSI quattro 3.0 TDI 3.0 TDI quattro 3.0 TFSI quattro S7 quattro	140 185 183 - 185 140 - 160 140 - 240 245 331	04/15→05/18 09/14→05/18 05/15→05/18 07/14→05/18 05/14→05/18 05/14→05/18 07/14→05/18	←	; +PR 1LP	1	**24.8190-0989.2**	**620989**	
2.8 FSI 2.8 FSI quattro 3.0 TDI 3.0 TDI quattro 3.0 TFSI quattro S7 quattro	150 150 150 150 - 230 228 309	02/11→03/15 10/10→03/15 11/10→03/15 10/10→06/17 01/11→03/15 02/12→03/15	←	; 05/14→; +PR 1LP	1	**24.8190-0989.2**	**620989**	
AUDI - Q5 (8RB) 11/08→12/17								
Warning Contact, brake pad wear								
2.0 Hybrid quattro 2.0 TDI 2.0 TDI quattro 2.0 TFSI Hybrid quattro 2.0 TFSI quattro 3.0 TDI quattro	180 100 - 140 100 - 140 155 132 - 169 190	09/12→05/16 11/10→05/17 08/09→05/17 06/11→06/16 08/09→05/17 11/13→05/17	←	; +PR 1LB / 1LC / 1LE / 1LP	1	**24.8190-0806.2** **24.8190-0989.2**	**620806** **620989**	
2.0 TDI quattro 3.0 TDI quattro	120 176	11/08→05/17 11/08→05/17	←	; 07/13→; +PR 1LB / 1LC / 1LE / 1LP	1	**24.8190-0806.2**	**620806**	
			←	; 03/09→; +PR 1LB / 1LC / 1LE / 1LP	1	**24.8190-0989.2**	**620989**	
2.0 TDI quattro 2.0 TFSI quattro 3.0 TDI quattro 3.2 FSI quattro	125 155 155 199	11/08→09/12 11/08→09/12 11/08→09/12 11/08→12/12	←	; 03/09→; +PR 1LB / 1LC / 1LE / 1LP	1	**24.8190-0989.2**	**620989**	
2.0 TDI quattro 2.0 TFSI quattro 3.0 TDI quattro 3.0 TFSI quattro	130 165 180 - 184 200	06/12→05/17 06/12→05/16 06/12→05/17 06/12→05/17	←	; 07/13→; +PR 1LB / 1LC / 1LE / 1LP	1	**24.8190-0806.2**	**620806**	
			←	; 09/12→; +PR 1LB / 1LC / 1LE / 1LP	1	**24.8190-0989.2**	**620989**	
AUDI - Q5 (FYB, FYG) 05/16→								
Warning Contact, brake pad wear								
2.0 TDI 2.0 TDI quattro 2.0 TFSI quattro 3.0 TDI quattro 30 TDI Mild Hybrid 35 TDI Mild Hybrid 35 TDI quattro 40 TDI Mild Hybrid quattro 40 TDI quattro 45 TDI quattro 45 TFSI Mild Hybrid quattro 50 TDI Mild Hybrid quattro 50 TDI quattro 50 TFSI e MILD HYBRID QUATTRO 50 TFSI e quattro 55 TFSI e quattro SQ5 TDI SQ5 TDI Mild Hybrid quattro SQ5 TFSI quattro	100 - 110 120 - 140 183 - 185 210 100 120 120 150 140 170 180 - 195 210 210 195 185 - 220 185 - 270 251 255 260	01/17→11/20 06/16→08/18 06/16→ 07/17→11/20 01/19→ 11/19→11/20 08/18→11/20 11/19→11/20 10/18→ 08/18→11/20 12/18→ 06/20→ 03/19→11/20 02/21→ 04/19→ 08/19→ 01/21→ 02/19→11/20 11/16→	←	+PR 1LG / 1LH	1	**24.8190-0809.2**	**620809**	
AUDI - Q5 Sportback (FYT) 11/20→								
Warning Contact, brake pad wear								
35 TDI 40 TDI quattro 45 TFSI quattro 50 TDI quattro ↓	120 150 195 210	10/20→ 11/20→ 11/20→ 11/20→	←	+PR 1LG / 1LH	1	**24.8190-0809.2**	**620809**	

	kW				! #			
AUDI - Q5 Sportback (FYT) 11/20→								
Warning Contact, brake pad wear								
50 TFSI e QUATTRO SQ5 TDI	195 251	02/21→ 01/21→	←	+PR 1LG / 1LH	1	**24.8190-0809.2**	**620809**	
AUDI - Q5 Van (8RB) 11/08→12/17								
Warning Contact, brake pad wear								
2.0 TDI 3.0 TDI quattro	100 - 140 190	11/11→05/17 11/13→05/17	←	; +PR 1LB / 1LC / 1LE / 1LP	1	**24.8190-0806.2** **24.8190-0989.2**	**620806** **620989**	
2.0 TDI quattro 2.0 TFSI quattro 3.0 TDI quattro 3.2 FSI quattro	125 155 176 199	11/08→09/12 11/08→09/12 11/08→04/13 11/08→09/12	←	; 03/09→; +PR 1LB / 1LC / 1LE / 1LP	1	**24.8190-0989.2**	**620989**	
2.0 TDI quattro 3.0 TDI quattro	130 180	07/12→06/14 06/12→05/17	← ←	; 07/13→; +PR 1LB / 1LC / 1LE / 1LP ; 09/12→; +PR 1LB / 1LC / 1LE / 1LP	1 1	**24.8190-0806.2** **24.8190-0989.2**	**620806** **620989**	
AUDI - Q5 Van (FYB, FYG) 05/16→								
Warning Contact, brake pad wear								
3.0 SQ5 TDI Mild Hybrid quattro 3.0 TDI quattro	255 210	02/19→11/20 07/17→11/20	←	+PR 1LG / 1LH	1	**24.8190-0809.2**	**620809**	
BMW - 1 (F40) 07/19→								
Warning Contact, brake pad wear								
M 135 i xDrive	225	07/19→	→		1	**24.8190-0807.2**	**620807**	
BMW - 3 (G20, G80) 11/18→								
Warning Contact, brake pad wear								
316 d 316 d Mild-Hybrid 318 d 318 d Mild-Hybrid 318 i 320 d 320 d Mild-Hybrid 320 d Mild-Hybrid xDrive 320 d xDrive 320 e Plug-in-Hybrid 320 i 320 i 1.6 320 i xDrive 330 d 330 d Mild-Hybrid 330 d Mild-Hybrid xDrive 330 d xDrive 330 e Plug-in-Hybrid 330 e Plug-in-Hybrid xDrive 330 i 330 i xDrive M340 d Mild-Hybrid xDrive M 340 i Mild-Hybrid xDrive M 340 i xDrive	85 - 90 85 - 90 100 - 110 100 - 110 115 120 - 140 120 - 140 120 - 140 120 - 140 120 - 140 135 125 135 195 210 210 195 135 - 215 135 - 215 190 190 250 275 275 - 285	03/20→ 08/20→ 03/19→03/20 04/20→ 03/20→ 11/18→02/20 03/20→ 03/20→ 11/18→02/20 07/20→ 03/19→ 03/19→ 07/19→ 03/19→ 11/20→ 11/20→ 07/19→ 07/19→ 07/20→ 11/18→ 11/18→ 04/20→ 11/20→ 03/19→	→		1	**24.8190-0810.2**	**620810**	
BMW - 3 Touring (G21, G81) 07/19→								
Warning Contact, brake pad wear								
316 d 316 d Mild-Hybrid 318 d 318 i 320 d ↓	85 - 90 85 - 90 100 - 110 115 120 - 140	11/20→ 07/20→ 11/19→07/20 03/20→ 07/19→02/20	→		1	**24.8190-0810.2**	**620810**	

© 2021 Continental Aftermarket & Services GmbH

	kW				! #			
BMW - 3 Touring (G21, G81) 07/19→								
Warning Contact, brake pad wear								
320 d Mild-Hybrid	120 - 140	03/20→	➡		1	**24.8190-0810.2**	**620810**	
320 d Mild-Hybrid xDrive	120 - 140	03/20→						
320 d xDrive	120 - 140	07/19→02/20						
320 e Plug-in-Hybrid	120 - 150	07/20→						
320 E PLUG-IN-HYBRID XDRIVE	120 - 150	03/21→						
320 i	135	11/19→						
330 d	195	11/19→						
330 d Mild-Hybrid	210	11/20→						
330 d Mild-Hybrid xDrive	210	11/20→						
330 d xDrive	195	07/19→						
330 e Plug-in-Hybrid	135 - 215	07/20→						
330 e Plug-in-Hybrid xDrive	135 - 215	07/20→						
330 i	190	07/19→						
330 i xDrive	190	07/19→						
M 340 d Mild-Hybrid xDrive	250	04/20→						
M 340 i Mild-Hybrid xDrive	275	11/20→						
M 340 i xDrive	275 - 285	11/19→						
BMW - 3 Touring Van (G21) 07/19→								
Warning Contact, brake pad wear								
320 d	140	07/19→02/20	➡		1	**24.8190-0810.2**	**620810**	
320 d Mild-Hybrid	140	03/20→						
320 d Mild-Hybrid xDrive	140	03/20→						
320 d xDrive	140	07/19→02/20						
320 i	135	11/19→						
330 d	195	11/19→						
330 d xDrive	195	11/19→						
330 i	190	07/19→						
M 340 i xDrive	275	11/19→						
BMW - 4 Cabriolet (G23) 11/20→								
Warning Contact, brake pad wear								
420 d Mild-Hybrid	120 - 140	11/20→	➡		1	**24.8190-0810.2**	**620810**	
420 i	135	11/20→						
430 d Mild-Hybrid	210	07/21→						
430 i	190	11/20→						
M440 d Mild-Hybrid xDrive	250	11/21→						
M 440 i Mild-Hybrid xDrive	275 - 285	11/20→						
BMW - 4 Coupe (G22, G82) 07/20→								
Warning Contact, brake pad wear								
420 d Mild-Hybrid	140	07/20→	➡		1	**24.8190-0810.2**	**620810**	
420 d Mild-Hybrid xDrive	120 - 140	07/20→						
420 i	135	07/20→						
420 i 1.6	125	11/20→						
430 d Mild-Hybrid xDrive	210	03/21→						
430 i	190	07/20→						
M440 d Mild-Hybrid xDrive	250	03/21→						
M 440 i Mild-Hybrid xDrive	285	07/20→						
BMW - 5 (E39) 09/95→07/03								
Wheel Speed Sensor								
520 d	100	02/00→06/03	⬅	04/00→	2	**24.0710-2054.3**	**360575**	L= 695
525 d	120	02/00→06/03						
520 i	100 - 125	01/96→06/03	⬅		2	**24.0710-2054.3**	**360575**	L= 695
530 d	142	09/98→06/03						
535 i	180	09/98→06/03						
M5	294	10/98→06/03						
520 i	110	01/96→06/03	⬅	09/98→	2	**24.0710-2054.3**	**360575**	L= 695
523 i	125	09/95→08/00						
528 i	142	09/95→08/00						
530 d	135	08/98→09/00						
↓								

© 2021 Continental Aftermarket & Services GmbH

	kW				! #			
BMW - 5 (E39) 09/95→07/03								
Wheel Speed Sensor								
540 i	210	03/96→06/03	←	09/98→	2	**24.0710-2054.3**	**360575**	L= 695
525 i 530 i	141 170	09/00→06/03 09/00→06/03	←	10/00→	2	**24.0710-2054.3**	**360575**	L= 695
525 td 525 tds	85 105	01/97→06/03 01/96→06/03	←	09/98→ 09/00	2	**24.0710-2054.3**	**360575**	L= 695
BMW - 5 (E60) 12/01→03/10								
Wheel Speed Sensor								
520 d 520 i 523 i 525 d xDrive 525 i 525 xi 530 d 530 d xDrive 530 i 530 i xDrive 530 xd 530 xi 540 i 545 i 550 i	110 - 130 115 - 125 140 145 141 160 170 173 200 200 173 200 220 - 225 245 270	09/05→12/09 12/06→03/10 03/07→12/09 09/07→12/09 09/03→02/05 03/07→12/09 09/05→03/07 09/07→12/09 03/07→12/09 09/08→12/09 03/07→08/07 03/07→10/09 09/05→12/09 09/03→08/05 09/05→12/09	→		2	**24.0710-2058.3**	**360579**	L= 790
520 i	125	07/03→03/10	→	→ 03/05	2	**24.0710-2058.3**	**360579**	L= 790
523 i 525 i 525 xi 530 i 530 xd 530 xi	130 160 160 190 170 190	10/04→02/07 03/05→12/09 04/05→02/07 03/05→03/07 02/05→02/07 09/04→02/07	→	07/05→	2	**24.0710-2058.3**	**360579**	L= 790
525 d 535 d	120 - 130 200	06/04→03/10 09/04→03/10	→	→ 03/07	2	**24.0710-2058.3**	**360579**	L= 790
525 d 535 d	145 210	01/07→03/10 01/07→03/10	→	03/07→ 02/10	2	**24.0710-2058.3**	**360579**	L= 790
525 i 525 i xDrive	155 - 160 160	07/05→03/10 09/08→03/10	→	→ 02/10	2	**24.0710-2058.3**	**360579**	L= 790
525 xd 530 d 530 xi	145 173 200	11/06→08/07 02/07→12/09 02/07→08/08	→	03/07→	2	**24.0710-2058.3**	**360579**	L= 790
530 d	155 - 160	09/02→12/09	→	07/03→ 08/05	2	**24.0710-2058.3**	**360579**	L= 790
530 i	170	12/01→02/05	→	07/03→	2	**24.0710-2058.3**	**360579**	L= 790
BMW - 5 (F10) 01/09→10/16								
Wheel Speed Sensor								
518 d 520 d 520 i 525 d 528 i 530 d 535 d 535 i 550 i ActiveHybrid M5 M5 30th Anniversary	100 - 110 100 - 151 120 - 135 150 - 160 180 - 190 190 220 - 230 240 300 - 330 225 - 250 412 441	07/13→10/16 06/10→10/16 09/11→10/16 03/10→10/16 03/10→10/16 09/11→10/16 09/10→10/16 07/13→10/16 03/10→10/16 12/11→10/16 09/11→10/16 07/14→10/16	→		2	**24.0710-2059.3**	**360580**	L= 675
518 d 520 d	120 155	10/13→10/16 10/13→10/16	→	07/14→	2	**24.0710-2059.3**	**360580**	L= 675
520 d xDrive 525 d xDrive 528 i xDrive 530 d xDrive ↓	100 - 151 155 - 160 180 190	01/13→10/16 09/11→10/16 09/11→10/16 03/11→10/16	← →		2 2	**24.0710-2067.3** **24.0710-2059.3**	**360588** **360580**	L= 937 L= 675

© 2021 Continental Aftermarket & Services GmbH

	kW				! #			
BMW - 5 (F10) 01/09→10/16								
Wheel Speed Sensor								
535 d xDrive 535 i xDrive	230 225 - 240	09/11→10/16 03/11→10/16	←		2	**24.0710-2067.3**	**360588**	L= 937
			→		2	**24.0710-2059.3**	**360580**	L= 675
550 i xDrive M 550 d xDrive	330 280	07/13→10/16 03/12→10/16						
520 d xDrive	147	01/13→06/14	←	02/13→	2	**24.0710-2067.3**	**360588**	L= 937
			→	02/13→	2	**24.0710-2059.3**	**360580**	L= 675
520 d xDrive	155	10/13→10/16	←	07/14→	2	**24.0710-2067.3**	**360588**	L= 937
			→	07/14→	2	**24.0710-2059.3**	**360580**	L= 675
523 i 530 d 535 i	150 - 155 180 225	06/09→08/11 01/10→08/11 01/10→10/16	→	03/10→	2	**24.0710-2059.3**	**360580**	L= 675
530 d 530 d xDrive	210 210	09/10→10/16 03/11→10/16	→	10/15→	2	**24.0710-2059.3**	**360580**	L= 675
530 i	190 - 200	03/10→06/13	→	09/11→	2	**24.0710-2059.3**	**360580**	L= 675
550 i xDrive	300	08/10→06/13	←	09/10→	2	**24.0710-2067.3**	**360588**	L= 937
			→	09/10→	2	**24.0710-2059.3**	**360580**	L= 675
M5 Competition	423	02/13→10/16	→	01/14→	2	**24.0710-2059.3**	**360580**	L= 675
BMW - 5 Gran Turismo (F07) 01/09→02/17								
Wheel Speed Sensor								
530 d xDrive 535 d xDrive 550 i xDrive	180 220 300	06/10→06/12 03/10→06/12 06/10→06/12	←	09/10→	2	**24.0710-2067.3**	**360588**	L= 937
530 d xDrive 535 d xDrive 535 i xDrive 550 i xDrive	190 230 225 330	07/12→02/17 07/12→02/17 09/10→02/17 07/12→02/17	←		2	**24.0710-2067.3**	**360588**	L= 937
BMW - 5 Touring (E39) 09/96→06/04								
Wheel Speed Sensor								
520 d 525 d	100 120	02/00→09/03 02/00→05/04	←	04/00→ 07/03	2	**24.0710-2054.3**	**360575**	L= 695
520 i 523 i	100 120	03/97→08/01 09/98→08/00	←		2	**24.0710-2054.3**	**360575**	L= 695
520 i 523 i 528 i 530 d	110 125 142 135	03/97→08/01 03/97→08/00 11/96→08/00 08/98→09/00	←	09/98→	2	**24.0710-2054.3**	**360575**	L= 695
520 i 530 d	120 - 125 142	09/00→12/03 09/00→05/04	←	→ 07/03	2	**24.0710-2054.3**	**360575**	L= 695
525 i 530 i	141 170	09/00→05/04 09/00→12/03	←	10/00→ 07/03	2	**24.0710-2054.3**	**360575**	L= 695
525 tds	105	03/97→05/04	←	09/98→ 09/00	2	**24.0710-2054.3**	**360575**	L= 695
540 i	210	04/97→12/03	←	09/98→ 07/03	2	**24.0710-2054.3**	**360575**	L= 695
BMW - 5 Touring (E61) 03/04→12/10								
Wheel Speed Sensor								
520 d 523 i 525 d 525 d xDrive 525 xd 530 d xDrive 530 i xDrive 530 xd 530 xi	110 - 130 140 145 145 145 173 200 173 200	09/05→05/10 03/07→01/10 03/07→05/10 09/08→05/10 09/07→09/08 09/07→05/10 09/08→05/10 03/07→08/07 03/07→05/10	→		2	**24.0710-2063.3**	**360584**	L= 960
520 d 523 i 525 d 525 i 530 d 530 i 530 xd 530 xi	120 130 130 155 - 160 155 - 170 190 170 190	04/05→05/10 10/04→02/07 03/04→03/07 03/05→05/10 03/04→05/10 09/04→02/07 02/05→02/07 04/05→02/07	→	09/05→	2	**24.0710-2063.3**	**360584**	L= 960
520 i ↓	120 - 125	07/07→12/10	→	→ 05/10	2	**24.0710-2063.3**	**360584**	L= 960

© 2021 Continental Aftermarket & Services GmbH

	kW				! #			
BMW - 5 Touring (E61) 03/04→12/10								
Wheel Speed Sensor								
525 i 525 i xDrive 525 xi	155 - 160 160 160	01/07→12/10 09/08→12/10 01/07→12/10	→	→ 05/10	2	**24.0710-2063.3**	**360584**	L= 960
523 i 530 i 535 d	140 200 210	01/07→12/10 01/07→12/10 01/07→12/10	→	03/07→ 05/10	2	**24.0710-2063.3**	**360584**	L= 960
525 xi 550 i	160 270	07/05→12/10 07/05→12/10	→	09/05→ 05/10	2	**24.0710-2063.3**	**360584**	L= 960
530 d 530 i 530 xi	173 200 200	02/07→05/10 09/06→03/10 09/06→09/08	→	03/07→	2	**24.0710-2063.3**	**360584**	L= 960
535 d	200	09/04→12/10	→	09/05→ 03/07	2	**24.0710-2063.3**	**360584**	L= 960
BMW - 5 Touring (F11) 11/09→02/17								
Wheel Speed Sensor								
520 d xDrive 525 d xDrive 528 i xDrive 530 d xDrive 535 d xDrive 535 i xDrive M 550 d xDrive	100 - 155 155 - 160 180 190 230 225 280	07/13→02/17 07/13→02/17 09/11→02/17 03/11→02/17 09/11→02/17 09/11→02/17 03/12→02/17	←		2	**24.0710-2067.3**	**360588**	L= 937
530 d xDrive 535 i xDrive	210 240	03/11→02/17 07/13→02/17	←	10/15→	2	**24.0710-2067.3**	**360588**	L= 937
BMW - 6 (E63) 09/03→12/10								
Wheel Speed Sensor								
630 i 650 i	190 - 200 270	09/04→08/10 09/05→08/10	→		2	**24.0710-2058.3**	**360579**	L= 790
635 d	210	07/07→07/10	→	09/07→	2	**24.0710-2058.3**	**360579**	L= 790
645 Ci	245	09/03→08/05	→	12/03→	2	**24.0710-2058.3**	**360579**	L= 790
BMW - 6 Cabriolet (E64) 03/04→12/10								
Wheel Speed Sensor								
630 i 645 Ci 650 i	190 - 200 245 270	09/04→08/10 04/04→08/05 09/05→08/10	→		2	**24.0710-2058.3**	**360579**	L= 790
635 d	210	07/07→07/10	→	09/07→	2	**24.0710-2058.3**	**360579**	L= 790
BMW - 6 Cabriolet (F12) 12/10→06/18								
Wheel Speed Sensor								
640 d 640 i 650 i	230 235 330	09/11→06/18 09/11→06/18 07/12→06/18	→		2	**24.0710-2059.3**	**360580**	L= 675
640 d xDrive 640 i xDrive 650 i xDrive	230 235 300	03/12→06/18 03/13→06/18 09/11→06/12	← →		2 2	**24.0710-2067.3** **24.0710-2059.3**	**360588** **360580**	L= 937 L= 675
650 i	300	12/10→06/12	→	03/11→	2	**24.0710-2059.3**	**360580**	L= 675
650 i xDrive	330	07/12→06/18	← →	09/12→ 09/12→	2 2	**24.0710-2067.3** **24.0710-2059.3**	**360588** **360580**	L= 937 L= 675
M6	412	03/12→06/18	→	06/12→	2	**24.0710-2059.3**	**360580**	L= 675
M6 Competition	423	07/13→02/15	→	02/14→	2	**24.0710-2059.3**	**360580**	L= 675
M6 Competition	441	03/15→06/18	→	07/15→	2	**24.0710-2059.3**	**360580**	L= 675
BMW - 6 Coupe (F13) 07/11→10/17								
Wheel Speed Sensor								
640 d 640 i 650 i M6	230 235 300 412	09/11→10/17 07/11→10/17 07/11→06/12 07/12→10/17	→		2	**24.0710-2059.3**	**360580**	L= 675
640 d xDrive 640 i xDrive 650 i xDrive	230 235 300	03/12→10/17 03/13→10/17 09/11→02/15	← →		2 2	**24.0710-2067.3** **24.0710-2059.3**	**360588** **360580**	L= 937 L= 675
650 i	330	07/12→10/17	→	09/12→	2	**24.0710-2059.3**	**360580**	L= 675
↓								

© 2021 Continental Aftermarket & Services GmbH

	kW				! #			
BMW - 6 Coupe (F13) 07/11→10/17								
Wheel Speed Sensor								
650 i xDrive	330	07/12→10/17	←	09/12→	2	**24.0710-2067.3**	**360588**	L= 937
			→	09/12→	2	**24.0710-2059.3**	**360580**	L= 675
M6 Competition	423	07/13→02/15	→	02/14→	2	**24.0710-2059.3**	**360580**	L= 675
M6 Competition	441	03/15→10/17	→	07/15→	2	**24.0710-2059.3**	**360580**	L= 675
BMW - 6 Gran Coupe (F06) 03/12→10/18								
Wheel Speed Sensor								
640 d 640 i 650 i M6	230 235 330 412	03/12→10/18 03/12→10/18 07/12→10/18 03/13→10/18	→		2	**24.0710-2059.3**	**360580**	L= 675
640 d xDrive 640 i xDrive 650 i xDrive	230 235 330	03/13→10/18 03/13→10/18 07/12→10/18	←		2	**24.0710-2067.3**	**360588**	L= 937
			→		2	**24.0710-2059.3**	**360580**	L= 675
M6 Competition	423	07/13→02/15	→	02/14→	2	**24.0710-2059.3**	**360580**	L= 675
M6 Competition	441	03/15→10/18	→	07/15→	2	**24.0710-2059.3**	**360580**	L= 675
BMW - 7 (F01, F02, F03, F04) 02/08→12/15								
Wheel Speed Sensor								
730 d	155	02/08→05/15	→	09/08→	2	**24.0710-2081.3**	**360602**	L= 953
730 d 730 i Li 740 d 740 i 750 i 760 i ActiveHybrid 7	180 - 190 190 190 - 400 225 - 230 235 - 240 300 - 330 400 235 - 260	09/08→05/15 09/09→06/15 09/08→12/15 09/09→06/15 09/08→12/15 09/08→06/15 09/09→12/15 08/12→06/15	→		2	**24.0710-2081.3**	**360602**	L= 953
730 d xDrive	155 - 190	11/11→05/15	←	06/12→	2	**24.0710-2067.3**	**360588**	L= 937
			→	06/12→	2	**24.0710-2081.3**	**360602**	L= 953
740 d xDrive	225 - 230	09/10→06/15	←		2	**24.0710-2067.3**	**360588**	L= 937
740 i Li xDrive 750 d xDrive 750 i ActiveHybrid 7	235 235 - 300 280 300 330 - 342	07/12→12/15 09/09→12/15 07/12→12/15 09/09→06/12 04/10→06/12	→		2	**24.0710-2081.3**	**360602**	L= 953
750 i Li xDrive	330 330	07/12→06/15 07/12→06/15	←	10/12→	2	**24.0710-2067.3**	**360588**	L= 937
			→	10/12→	2	**24.0710-2081.3**	**360602**	L= 953
BMW - X1 (E84) 03/09→06/15								
Wheel Speed Sensor								
sDrive 16 d xDrive 25 d	85 160	04/12→06/15 10/09→06/15	→	07/12→	2	**24.0710-2060.3**	**360581**	L= 992
sDrive 16 i sDrive 18 d sDrive 18 i sDrive 20 d sDrive 20 i xDrive 18 d xDrive 20 d xDrive 20 i xDrive 23 d xDrive 25 i xDrive 28 i	105 105 100 - 110 120 - 135 135 105 120 - 135 135 150 160 180	03/13→06/15 12/09→06/15 03/10→06/15 10/09→06/15 09/11→06/15 10/09→06/15 03/10→06/15 09/11→06/15 10/09→06/15 03/10→08/11 03/11→06/15	→		2	**24.0710-2060.3**	**360581**	L= 992
sDrive 18 d xDrive 18 d xDrive 20 d xDrive 28 i	100 100 130 190	03/09→06/15 03/09→06/15 09/09→06/12 09/09→08/11	→	10/09→	2	**24.0710-2060.3**	**360581**	L= 992

	kW				! #			
BMW - X2 (F39) 11/17→								
Warning Contact, brake pad wear								
M35 i	225	11/18→	➡		1	**24.8190-0807.2**	**620807**	
BMW - X3 (E83) 01/03→12/11								
Wheel Speed Sensor								
2.0 d	110	09/04→08/07	⬅		2	**24.0710-2064.3**	**360585**	L= 950
2.0 i	110	07/05→08/08						
2.0 sd	130	09/07→08/08						
2.5 i	141	03/04→07/06						
2.5 si xDrive	155	08/06→08/08						
3.0 d	150 - 160	01/04→08/08						
3.0 sd	210	09/06→08/08						
xDrive 20 d	120 - 130	09/08→08/10						
xDrive 25 i	160	09/08→08/10						
xDrive 30 d	155 - 160	09/08→08/10						
xDrive 30 i	200	09/08→08/10						
2.5 si	160	08/06→08/08	⬅	09/06→	2	**24.0710-2064.3**	**360585**	L= 950
3.0 si	200	08/06→08/08						
3.0 i xDrive	170	09/03→07/06	⬅	10/03→	2	**24.0710-2064.3**	**360585**	L= 950
xDrive 18 d	100 - 105	09/08→12/11	⬅	→ 08/10	2	**24.0710-2064.3**	**360585**	L= 950
xDrive 20 i	110	09/08→08/11						
xDrive 35 d	210	09/08→08/11						
BMW - Z4 Roadster (G29) 11/18→								
Warning Contact, brake pad wear								
M40 i	250	11/18→	➡		1	**24.8190-0810.2**	**620810**	
sDrive 20 i	120 - 145	11/18→						
sDrive 30 i	190	11/18→						
CITROËN - C4 I (LC_) 11/04→11/14								
Wheel Speed Sensor								
1.4 16V	65	11/04→07/11	➡	Orga 11018→	2	**24.0710-2040.3**	**360561**	L= 825
1.6 16V	80	11/04→07/11						
1.6 16V Bio-Flex	80	09/07→07/08						
1.6 HDi	66 - 80	11/04→07/11						
1.6 THP 140	103	07/08→07/11						
1.6 THP 150	110	07/08→07/11						
1.6 VTi 120	88	07/08→07/11						
2.0 16V	100 - 130	11/04→07/11						
2.0 HDi	100 - 103	11/04→07/11						
2.0 HDi	81	04/07→07/08	➡		2	**24.0710-2040.3**	**360561**	L= 825
CITROËN - C4 I Kasten/Schrägheck (LR_) 02/05→12/10								
Wheel Speed Sensor								
2.0 HDi	100	02/05→12/10	➡	Orga 11018→	2	**24.0710-2040.3**	**360561**	L= 825
CITROËN - C4 I Stufenheck 07/06→								
Wheel Speed Sensor								
1.6 16V	80	07/06→07/11	➡	Orga 11018→	2	**24.0710-2040.3**	**360561**	L= 825
1.6 HDi	80	07/06→07/11						
2.0 16V	103	07/06→07/11						
CITROËN - C4 Coupe (LA_) 11/04→12/13								
Wheel Speed Sensor								
1.4 16V	65	11/04→07/11	➡	Orga 11018→	2	**24.0710-2040.3**	**360561**	L= 825
1.6 16V	80	11/04→07/11						
1.6 HDi	66 - 80	11/04→07/11						
1.6 THP 150	110	07/08→07/11						
1.6 VTi 120	88	07/08→07/11						
2.0 16V	100 - 130	11/04→12/10						
2.0 HDi	100 - 103	11/04→07/11						
2.0 VTR	103	10/06→12/07						

© 2021 Continental Aftermarket & Services GmbH

	kW				! #			
DACIA - LOGAN (LS_) 08/04→								
Wheel Speed Sensor								
1.2 16V	55	02/06→	➡			24.0710-2042.3	360563	L= 505
1.2 16V LPG	55	02/06→						
1.4	55	09/04→	➡			24.0710-2043.3	360564	L= 534
1.4 MPI LPG	55	02/06→12/12						
1.5 dCi	48 - 65	09/05→						
1.6	64	09/04→						
1.6 16V	77	02/06→						
1.6 16V Flexifuel	77	07/10→						
1.6 Bifuel	62	05/10→						
1.6 LPG	64	08/04→03/11						
1.6 MPI 85	62	05/10→						
DACIA - LOGAN EXPRESS (FS_) 03/09→								
Wheel Speed Sensor								
1.4	55	03/09→	➡			24.0710-2042.3	360563	L= 505
1.5 dCi	50 - 65	03/09→	➡			24.0710-2043.3	360564	L= 534
1.6	64	03/09→						
1.6 LPG	62	05/10→12/12						
1.6 MPI 85	62	05/10→						
DACIA - LOGAN MCV (KS_) 02/07→								
Wheel Speed Sensor								
1.4	55	02/07→	➡			24.0710-2042.3	360563	L= 505
1.5 dCi	50 - 65	02/07→	➡			24.0710-2043.3	360564	L= 534
1.6	64	02/07→						
1.6 16V	77	02/07→						
1.6 16V Hi-Flex	77	11/09→						
1.6 Bifuel	62 - 64	11/08→						
1.6 MPI 85	62	05/10→						
DACIA - LOGAN Pick-up (US_) 03/08→								
Wheel Speed Sensor								
1.4	55	01/09→	➡			24.0710-2042.3	360563	L= 505
1.5 dCi	50 - 65	03/08→	➡			24.0710-2043.3	360564	L= 534
1.6	64	03/08→						
1.6 Bifuel	62	05/10→						
1.6 MPI 85	62	05/10→						
DACIA - SANDERO 06/08→								
Wheel Speed Sensor								
1.2 16V	55	11/08→	➡			24.0710-2042.3	360563	L= 505
1.2 16V LPG	55	11/08→						
1.4	55	06/08→	➡			24.0710-2043.3	360564	L= 534
1.4 MPI LPG	53	01/09→						
1.5 dCi	48 - 65	11/08→						
1.6	64	06/08→						
1.6 16V	77	07/11→						
1.6 16V Bifuel	77	01/11→						
1.6 Hi-Flex	64	06/08→12/12						
1.6 LPG	60 - 64	06/08→12/12						
1.6 MPI 85	62	05/10→						
FIAT - BRAVO II (198_) 11/06→								
Wheel Speed Sensor								
1.4	66	04/07→12/14	⬅		2	24.0710-2047.3	360568	L= 1,066
1.4 16V	103	04/10→12/14						
1.4 T-Jet	88 - 110	09/07→12/14						
1.6 D Multijet	66 - 88	03/08→12/14						
1.9 D Multijet	66 - 110	04/07→12/14						
2.0 D Multijet	120 - 121	09/08→12/14						
1.4 LPG	66	12/08→12/14	⬅	11/09→	2	24.0710-2047.3	360568	L= 1,066
1.6 D Multijet	77	09/07→12/14	⬅	03/08→	2	24.0710-2047.3	360568	L= 1,066
1.9 D Multijet	85	11/06→12/09	⬅	04/07→	2	24.0710-2047.3	360568	L= 1,066

© 2021 Continental Aftermarket & Services GmbH

	kW				! #			
FIAT - BRAVO Van (198_) 03/08→12/14								
Wheel Speed Sensor								
1.6 JTD Multijet	77	03/08→12/14	←		2	**24.0710-2047.3**	**360568**	L= 1,066
FIAT - IDEA (350_) 12/03→								
Wheel Speed Sensor								
1.2 16V 1.3 D Multijet 1.4 16V 1.9 JTD	59 51 70 74	01/04→ 01/04→ 01/04→ 01/04→	←	→ 02/08	2	**24.0710-2050.3**	**360571**	L= 1,034
1.3 D Multijet 1.4	66 57	10/05→ 10/05→	←	11/05→ 02/08	2	**24.0710-2050.3**	**360571**	L= 1,034
1.3 D Multijet 1.6 D Multijet	70 88	05/08→12/12 05/08→	←	→ 07/12	2	**24.0710-2050.3**	**360571**	L= 1,034
1.4	66	12/03→	←	01/04→ 02/08	2	**24.0710-2050.3**	**360571**	L= 1,034
1.4 LPG	57	03/09→	←	03/09→ 07/12	2	**24.0710-2050.3**	**360571**	L= 1,034
FIAT - IDEA Van (350_) 12/03→								
Wheel Speed Sensor								
1.4 JTD Multijet MJTD	70 51 - 66 74	10/04→12/12 10/04→12/11 10/04→12/10	←		2	**24.0710-2050.3**	**360571**	L= 1,034
FIAT - MULTIPLA (186_) 04/99→06/10								
Wheel Speed Sensor								
1.6 1.6 100 16V	76 76	09/00→06/10 04/99→06/10	←			**24.0710-2065.3**	**360586**	L= 1,285
1.6 16V 1.6 16V Bipower 1.6 16V Blupower 1.6 16V GPL 1.9 JTD 1.9 JTD 105 1.9 JTD 110 1.9 JTD 115	70 76 70 76 88 77 81 85	04/02→06/10 04/99→06/10 04/99→06/10 10/01→06/10 04/02→06/10 04/99→06/10 03/01→07/02 07/02→06/10	←			**24.0710-2066.3**	**360587**	L= 1,256
FIAT - MULTIPLA VAN (186_) 04/99→06/10								
Wheel Speed Sensor								
1.9 JTD	85 - 88	04/02→06/10	←			**24.0710-2065.3**	**360586**	L= 1,285
Bipower	76	10/01→06/10	←			**24.0710-2066.3**	**360587**	L= 1,256
FIAT - PUNTO (188_) 09/99→07/12								
Wheel Speed Sensor								
1.2 16V 80 1.2 60 1.9 DS 60 1.9 JTD 1.9 JTD 80	59 44 44 63 59	09/99→04/06 09/99→12/10 09/99→03/12 10/01→03/12 09/99→03/12	→	; 07/02→ 06/03		**24.0710-2039.3**	**360560**	L= 1,755
1.2 Bipower	44	08/01→05/03	→	; 07/02→		**24.0710-2039.3**	**360560**	L= 1,755
FIAT - PUNTO Kasten/Schrägheck (188_) 02/00→12/10								
Wheel Speed Sensor								
1.2 60 1.9 D 60 1.9 JTD	44 44 63	02/00→10/09 02/00→10/09 02/00→10/09	→	; 07/02→ 06/03		**24.0710-2039.3**	**360560**	L= 1,755
FORD - MONDEO III (B5Y) 10/00→03/07								
Wheel Speed Sensor								
1.8 16V	81 - 92	10/00→03/07	←		2	**24.0710-2046.3**	**360567**	L= 54
1.8 SCi 2.0 16V 2.0 16V DI / TDDi / TDCi 2.0 16V TDDi / TDCi 2.0 TDCi 2.2 TDCi 2.5 V6 24V 3.0 V6 24V ST220	96 107 66 85 96 110 - 114 125 150 166	06/03→03/07 10/00→03/07 10/00→03/07 10/00→03/07 10/01→03/07 09/04→03/07 10/00→03/07 09/04→03/07 04/02→03/07	→		2	**24.0710-2046.3**	**360567**	L= 54

© 2021 Continental Aftermarket & Services GmbH

	kW				! #			
FORD - MONDEO III Stufenheck (B4Y) 10/00→09/07								
Wheel Speed Sensor								
1.8 16V	81 - 92	10/00→03/07	←		2	**24.0710-2046.3**	**360567**	L= 54
1.8 SCi	96	06/03→03/07	→		2	**24.0710-2046.3**	**360567**	L= 54
2.0 16V	107	10/00→03/07						
2.0 16V DI / TDDi / TDCi	66	10/00→03/07						
2.0 16V TDDi / TDCi	85	10/00→03/07						
2.0 DI	92	10/00→03/07						
2.0 TDCi	96	10/01→03/07						
2.2 TDCi	110 - 114	09/04→03/07						
2.5 V6	125	10/00→03/07						
2.5 V6 24V	125	10/00→03/07						
3.0 V6 24V	150	09/04→03/07						
ST220	166	04/02→03/07						
FORD - MONDEO III Turnier (BWY) 10/00→03/07								
Wheel Speed Sensor								
1.8 16V	81 - 92	10/00→03/07	←		2	**24.0710-2046.3**	**360567**	L= 54
1.8 SCi	96	06/03→03/07	→		2	**24.0710-2046.3**	**360567**	L= 54
2.0 16V	107	10/00→03/07						
2.0 16V DI / TDDi / TDCi	66	10/00→03/07						
2.0 16V TDDi / TDCi	85	10/00→03/07						
2.0 TDCi	96	10/01→03/07						
2.2 TDCi	110 - 114	09/04→03/07						
2.5 V6 24V	125	10/00→03/07						
3.0 V6 24V	150	09/04→03/07						
ST220	166	04/02→03/07						
LANCIA - DELTA III (844_) 08/08→08/14								
Wheel Speed Sensor								
1.4	88 - 110	09/08→08/14	←		2	**24.0710-2047.3**	**360568**	L= 1,066
1.4 16V	103	07/10→08/14						
1.4 Bifuel	88	07/11→08/14						
1.6 D Multijet	77 - 88	08/08→08/14						
1.8	147	01/09→08/14						
1.9 D Multijet	140	01/09→08/14						
2.0 D Multijet	120 - 121	09/08→08/14						
LANCIA - MUSA (350_) 10/04→09/12								
Wheel Speed Sensor								
1.3 D Multijet	51 - 66	10/04→09/12	←		2	**24.0710-2050.3**	**360571**	L= 1,034
1.4	57 - 70	10/04→09/12						
1.4 LPG	57	11/10→09/12						
1.6 D Multijet	85 - 88	07/08→09/12						
1.9 D Multijet	74	10/04→09/12						
1.3 D Multijet	70	03/09→09/12	←	08/09→	2	**24.0710-2050.3**	**360571**	L= 1,034
LANCIA - YPSILON (843_) 10/03→12/11								
Wheel Speed Sensor								
1.2	44 - 59	10/03→12/11	←	→ 06/11	2	**24.0710-2050.3**	**360571**	L= 1,034
1.3 JTD	51	10/03→12/11						
1.4	57	02/06→12/11						
1.4 16V	70	10/03→12/11						
1.4 LPG	57	11/10→12/11						
1.3 D Multijet	55 - 66	09/06→12/11	←	10/06→ 06/11	2	**24.0710-2050.3**	**360571**	L= 1,034
1.3 D Multijet	77	05/07→12/11	←	07/07→ 06/11	2	**24.0710-2050.3**	**360571**	L= 1,034
MAZDA - MX-5 II (NB) 01/98→10/05								
Brake Caliper								
1.6 16V	81	05/98→10/05	→	◪; for vehicles without sports package; + ABS		**24.3324-1702.5**	**241280**	without holder
1.8	107	08/02→10/05						
1.8 16V	102 - 107	05/98→10/05						
1.8	103	01/98→07/02	→	◪; 05/98→; for vehicles without sports package; + ABS		**24.3324-1702.5**	**241280**	without holder

	kW				! #			
MERCEDES-BENZ - A-KLASSE (W177) 03/18→								
Brake Pad Set, disc brake								
A 160	80	06/18→		for vehicles without sports brake system		13.0460-3884.2	603884	- WE / - WK + Zub
A 160 d	70	05/19→						
A 180	100	06/18→		for vehicles with sports brake system		13.0460-3885.2	603885	- WE / - WK + Zub
A 180 d	85	03/18→				13.0470-3885.2	LD3885	- WE / - WK + Zub Ceramic
A 200	110 - 120	03/18→						
A 200 4-matic	120	10/20→						
A 200 d	110	11/18→						
A 200 d 4-matic	110	10/19→						
A 220	140	07/18→						
A 220 4-matic	140	07/18→10/19						
A 220 d	140	11/18→						
A 220 d 4-matic	140	10/19→						
A 250	165	03/18→						
A 250 4-matic	165	07/18→						
A 250 e	118 - 160	08/19→				13.0460-3885.2	603885	- WE / - WK + Zub
						13.0470-3885.2	LD3885	- WE / - WK + Zub Ceramic
AMG A 35 4-matic	225	09/18→						
AMG A 45 4-matic+	285	07/19→						
AMG A 45 S 4-matic+	310	07/19→						
MERCEDES-BENZ - A-KLASSE Stufenheck (V177) 09/18→								
Brake Pad Set, disc brake								
A 160 d	70	10/19→		for vehicles without sports brake system		13.0460-3884.2	603884	- WE / - WK + Zub
A 180	100	04/19→						
A 180 d	85	09/18→		for vehicles with sports brake system		13.0460-3885.2	603885	- WE / - WK + Zub
A 200	110 - 120	09/18→				13.0470-3885.2	LD3885	- WE / - WK + Zub Ceramic
A 200 4-matic	120	10/20→						
A 200 d	110	08/19→						
A 200 d 4-matic	110	10/19→						
A 220	140	01/19→						
A 220 4-matic	140	09/18→						
A 220 d	140	08/19→						
A 220 d 4-matic	140	10/19→						
A 250	165	09/18→		for vehicles without AMG sports package; for vehicles without sports brake system		13.0460-3884.2	603884	- WE / - WK + Zub
A 250 4-matic	165	09/18→						
				for vehicles with AMG Sports Package; for vehicles with sports brake system		13.0460-3885.2	603885	- WE / - WK + Zub
						13.0470-3885.2	LD3885	- WE / - WK + Zub Ceramic
A 250 e	118 - 160	08/19→				13.0460-3885.2	603885	- WE / - WK + Zub
						13.0470-3885.2	LD3885	- WE / - WK + Zub Ceramic
AMG A 35 4-matic	225	03/19→						
MERCEDES-BENZ - B-KLASSE Sports Tourer (W247) 12/18→								
Brake Pad Set, disc brake								
B 160	80	04/19→		for vehicles without sports brake system		13.0460-3884.2	603884	- WE / - WK + Zub
B 160 d	70	05/19→						
B 180	100	12/18→		for vehicles with sports brake system		13.0460-3885.2	603885	- WE / - WK + Zub
B 180 d	85	12/18→				13.0470-3885.2	LD3885	- WE / - WK + Zub Ceramic
B 200	110 - 120	12/18→						
B 200 4-matic	120	10/20→						
B 200 d	110	12/18→						
B 200 d 4-matic	110	10/19→						
B 220	140	04/19→						
B 220 4-matic	140	01/19→						
B 220 d	140	12/18→						
B 220 d 4-matic	140	10/19→						
B 250	165	01/19→				13.0460-3885.2	603885	- WE / - WK + Zub
B 250 4-matic	165	01/19→				13.0470-3885.2	LD3885	- WE / - WK + Zub Ceramic
B 250 e	118 - 160	06/20→						
MERCEDES-BENZ - CLA (C118) 03/19→								
Brake Pad Set, disc brake								
AMG CLA 35 4-matic	225	04/19→				13.0460-3885.2	603885	- WE / - WK + Zub
AMG CLA 45 4-matic+	285	07/19→				13.0470-3885.2	LD3885	- WE / - WK + Zub Ceramic
AMG CLA 45 S 4-matic+	310	07/19→						
CLA 250	165	03/19→						
CLA 250 4-matic	165	03/19→						
CLA 250 e	118 - 160	06/20→						
CLA 180	100	03/19→		for vehicles without sports brake system		13.0460-3884.2	603884	- WE / - WK + Zub
CLA 180 d	85	03/19→						
CLA 200	110 - 120	03/19→		for vehicles with sports brake system		13.0460-3885.2	603885	- WE / - WK + Zub
						13.0470-3885.2	LD3885	- WE / - WK + Zub Ceramic
CLA 200 4-matic	120	10/20→						
↓								

© 2021 Continental Aftermarket & Services GmbH

	kW				! #			
MERCEDES-BENZ - CLA (C118) 03/19→								
Brake Pad Set, disc brake								
CLA 200 d	110	04/19→		for vehicles without sports brake system		**13.0460-3884.2**	**603884**	- WE / - WK + Zub
CLA 200 d 4-matic	110	04/19→						
CLA 220	140	03/19→		for vehicles with sports brake system		**13.0460-3885.2**	**603885**	- WE / - WK + Zub
CLA 220 4-matic	140	03/19→				**13.0470-3885.2**	**LD3885**	- WE / - WK + Zub Ceramic
CLA 220 d	140	04/19→						
CLA 220 d 4-matic	140	07/20→						
MERCEDES-BENZ - CLA Shooting Brake (X118) 06/19→								
Brake Pad Set, disc brake								
AMG CLA 35 4-matic	225	06/19→				**13.0460-3885.2**	**603885**	- WE / - WK + Zub
AMG CLA 45 4-matic+	285	07/19→				**13.0470-3885.2**	**LD3885**	- WE / - WK + Zub Ceramic
AMG CLA 45 S 4-matic+	310	07/19→						
CLA 250	165	06/19→						
CLA 250 4-matic	165	06/19→						
CLA 250 e	118 - 160	06/20→						
CLA 180	100	06/19→		for vehicles without sports brake system		**13.0460-3884.2**	**603884**	- WE / - WK + Zub
CLA 180 d	85	06/19→						
CLA 200	110 - 120	06/19→		for vehicles with sports brake system		**13.0460-3885.2**	**603885**	- WE / - WK + Zub
						13.0470-3885.2	**LD3885**	- WE / - WK + Zub Ceramic
CLA 200 d	110	06/19→						
CLA 200 d 4-matic	110	10/19→						
CLA 220	140	06/19→						
CLA 220 d	140	06/19→						
CLA 220 d 4-matic	140	10/19→						
MERCEDES-BENZ - CLS (C219) 10/04→02/11								
Wheel Speed Sensor								
CLS 280	170	07/08→12/10			2	**24.0710-2053.3**	**360574**	L= 750
CLS 300	170	04/09→12/10						
CLS 320 CDI	155 - 165	01/05→12/10			2	**24.0710-2051.3**	**360572**	L= 1,460
CLS 350	200 - 215	10/04→12/10						
CLS 350 CDI	165	04/09→12/10						
CLS 500	225 - 285	10/04→12/10						
CLS 55 AMG	350	01/05→12/10						
CLS 63 AMG	378	04/06→12/10						
MERCEDES-BENZ - E-KLASSE (W211) 03/02→03/09								
Wheel Speed Sensor								
E 200 CDI	75 - 100	07/02→12/08			2	**24.0710-2053.3**	**360574**	L= 750
E 200 Kompressor	120 - 135	11/02→12/08			2	**24.0710-2051.3**	**360572**	L= 1,460
E 200 NGT	120	03/04→12/08						
E 220 CDI	100 - 125	03/02→12/08						
E 230	150	09/07→12/08						
E 240	130	03/02→12/08						
E 270 CDI	120 - 130	03/02→12/08						
E 280	170	03/05→12/08						
E 280 CDI	130 - 140	05/04→12/08						
E 300 BlueTEC	155	09/07→12/08						
E 320	165	03/02→12/08						
E 320 CDI	150 - 165	11/02→12/08						
E 350	200	03/05→12/08						
E 350 CGI	215	09/07→12/08						
E 400 CDI	191	02/03→12/08						
E 420 CDI	231	01/06→12/08						
E 500	225 - 285	03/02→12/08						
E 55 AMG Kompressor	350	10/02→12/08						
E 63 AMG	378	03/06→12/08						
E 240 4-matic	130	03/03→12/08			2	**24.0710-2084.3**	**360605**	L= 795
E 280 4-matic	170	01/06→12/08						
E 280 CDI 4-matic	140	03/05→12/08			2	**24.0710-2051.3**	**360572**	L= 1,460
E 320 4-matic	165	03/03→12/08						
E 320 CDI 4-matic	165	03/05→12/08						
E 350 4-matic	200	03/05→12/08						
E 500 4-matic	225 - 285	10/03→12/08						

© 2021 Continental Aftermarket & Services GmbH

	kW				! #			
MERCEDES-BENZ - E-KLASSE Pritsche/Fahrgestell (VF211) 03/03→07/09								
Wheel Speed Sensor								
E 220 CDI	110 - 125	10/03→07/09	←		2	**24.0710-2053.3**	**360574**	L= 750
E 270 CDI	120 - 130	03/03→07/09	→		2	**24.0710-2051.3**	**360572**	L= 1,460
E 280 CDI	140	08/05→07/09						
MERCEDES-BENZ - E-KLASSE T-Model (S211) 02/03→07/09								
Wheel Speed Sensor								
350 CGI	215	05/06→07/09	←		2	**24.0710-2053.3**	**360574**	L= 750
E 200 CDI	100	04/06→07/09	→		2	**24.0710-2051.3**	**360572**	L= 1,460
E 200 Kompressor	135	04/06→07/09						
E 200 T Kompressor	120	03/03→07/09						
E 220 CDI	100	03/03→07/09						
E 220 T CDI	110 - 125	03/03→07/09						
E 230 T	150	05/07→07/09						
E 240 T	130	03/03→07/09						
E 270 T CDI	120 - 130	03/03→07/09						
E 280 T	170	03/05→07/09						
E 280 T CDI	130 - 140	05/04→07/09						
E 320 T	165	03/03→07/09						
E 320 T CDI	150 - 165	03/03→07/09						
E 350 T	200	03/05→07/09						
E 500 T	225 - 285	10/03→07/09						
E 55 T AMG Kompressor	350	07/03→07/09						
E 63 AMG	378	03/06→07/09						
E 240 T 4-matic	130	07/03→07/09	←		2	**24.0710-2084.3**	**360605**	L= 795
E 280 T 4-matic	170	03/05→07/09	→		2	**24.0710-2051.3**	**360572**	L= 1,460
E 280 T CDI 4-matic	140	03/05→07/09						
E 320 T 4-matic	165	07/03→07/09						
E 320 T CDI 4-matic	165	03/05→07/09						
E 350 T 4-matic	200	03/05→07/09						
E 500 T 4-matic	225 - 285	10/03→07/09						
MERCEDES-BENZ - EQA (H243) 07/20→								
Brake Pad Set, disc brake								
EQA 250	140	02/21→	→			**13.0460-3885.2**	**603885**	- WE / - WK + Zub
						13.0470-3885.2	**LD3885**	- WE / - WK + Zub Ceramic
MERCEDES-BENZ - GLA (H247) 02/20→								
Brake Pad Set, disc brake								
AMG GLA 35 4-matic	225	06/20→	→			**13.0460-3885.2**	**603885**	- WE / - WK + Zub
AMG GLA 45 4-matic+	285	06/20→				**13.0470-3885.2**	**LD3885**	- WE / - WK + Zub Ceramic
AMG GLA 45 S 4-matic+	310	06/20→						
GLA 220 d	140	02/20→						
GLA 220 d 4-matic	140	02/20→						
GLA 250	165	02/20→						
GLA 250 4-matic	165	02/20→						
GLA 250 e	118 - 160	06/20→						
GLA 180	100	07/20→	→	for vehicles without sports brake system		**13.0460-3884.2**	**603884**	- WE / - WK + Zub
GLA 180 d	85	03/20→	→	for vehicles with sports brake system		**13.0460-3885.2**	**603885**	- WE / - WK + Zub
GLA 200	120	02/20→				**13.0470-3885.2**	**LD3885**	- WE / - WK + Zub Ceramic
GLA 200 4-matic	120	10/20→						
GLA 200 d	110	02/20→						
GLA 200 d 4-matic	110	02/20→						
MERCEDES-BENZ - GLB (X247) 08/19→								
Brake Pad Set, disc brake								
AMG GLB 35 4-matic	225	08/19→	→			**13.0460-3885.2**	**603885**	- WE / - WK + Zub
GLB 220 d	140	12/19→				**13.0470-3885.2**	**LD3885**	- WE / - WK + Zub Ceramic
GLB 220 d 4-matic	140	08/19→						
GLB 250	165	12/19→						
GLB 250 4-matic	165	08/19→						
GLB 180	100	04/20→	→	for vehicles without 3rd seating row; for vehicles without sports brake system		**13.0460-3884.2**	**603884**	- WE / - WK + Zub
GLB 180 d	85	08/19→						
GLB 200	120	08/19→	→	for vehicles with sports brake system		**13.0460-3885.2**	**603885**	- WE / - WK + Zub
GLB 200 4-matic	120	10/20→				**13.0470-3885.2**	**LD3885**	- WE / - WK + Zub Ceramic
GLB 200 d	110	08/19→						
GLB 200 d 4-matic	110	08/19→	→	for vehicles with 3rd seating row		**13.0460-3885.2**	**603885**	- WE / - WK + Zub
						13.0470-3885.2	**LD3885**	- WE / - WK + Zub Ceramic

© 2021 Continental Aftermarket & Services GmbH

	kW				! #			
MERCEDES-BENZ - GLE (W166) 04/15→10/18								
Brake Hose								
250 d	150	04/15→10/18	➡		2	**83.7715-0473.3**	**331537**	L= 475
250 d 4-matic	150	04/15→10/18						
320 4-matic	200	10/15→10/18						
350 d 4-matic	183 - 190	04/15→10/18						
400 4-matic	245	04/15→10/18						
450 AMG 4-matic	270	10/15→10/18						
500 4-matic	320 - 335	04/15→10/18						
500 e 4-matic	245 - 325	04/15→10/18						
AMG 43 4-matic	270 - 287	05/16→10/18						
AMG 63 4-matic	410	04/15→10/18						
AMG 63 S 4-matic	430	04/15→10/18						
MERCEDES-BENZ - GLE Coupe (C292) 03/15→10/19								
Brake Hose								
350 d 4-matic	190	03/15→10/19	➡		2	**83.7715-0473.3**	**331537**	L= 475
400 4-matic	245	03/15→10/19						
450 AMG 4-matic	270	03/15→10/19						
500 4-matic	335	10/15→10/19						
AMG 43 4-matic	270 - 287	05/16→10/19						
AMG 63 4-matic	410	03/15→10/19						
AMG 63 S 4-matic	430	03/15→10/19						
MERCEDES-BENZ - GL-KLASSE (X166) 07/12→12/15								
Brake Hose								
GL 350 CDI / BlueTec 4-matic	190	07/12→10/15	➡		2	**83.7715-0473.3**	**331537**	L= 475
GL 350 CDI / BlueTEC 4-matic	183	07/12→10/15						
GL 400 4-matic	245	08/13→10/15						
GL 500 4-matic	300 - 320	07/12→10/15						
GL 63 AMG 4-matic	400 - 410	07/12→10/15						
MERCEDES-BENZ - GLS (X166) 11/15→04/19								
Brake Hose								
350 d 4-matic	190	11/15→04/19	➡		2	**83.7715-0473.3**	**331537**	L= 475
400 4-matic	245	11/15→04/19						
500 4-matic	335	11/15→04/19						
AMG 63 4-matic	430	11/15→04/19						
MERCEDES-BENZ - M-KLASSE (W166) 06/11→12/15								
Brake Hose								
ML 250 CDI / BlueTEC 4-matic	150	06/11→12/15	➡		2	**83.7715-0473.3**	**331537**	L= 475
ML 350 4-matic	225	06/11→12/15						
ML 350 BlueTEC 4-matic	190	06/11→02/15						
ML 350 CDI 4-matic	170	06/11→02/15						
ML 400 4-matic	245	08/13→02/15						
ML 500 4-matic	300	02/12→02/15						
ML 300 4-matic	185	08/12→02/15	➡	04/14→	2	**83.7715-0473.3**	**331537**	L= 475
ML 63 AMG 4-matic	386 - 410	11/11→02/15	➡	04/12→	2	**83.7715-0473.3**	**331537**	L= 475
MERCEDES-BENZ - S-KLASSE (W221) 09/05→12/13								
Wheel Speed Sensor								
S 280	170	08/06→12/13	➡	→ A 293047	2	**24.0710-5068.3**	**360537**	L= 675
S 300	170	08/06→12/13						
S 320 CDI	173	12/05→06/09						
S 320 CDI 4-matic	155 - 173	10/05→12/13						
S 350 4-matic	200	02/08→12/13						
S 350 CDI	155 - 173	06/09→12/13						
S 350 CDI 4-matic	155 - 173	01/09→07/13						
S 420 CDI	235	10/06→12/09						
S 450 CDI	235	01/09→12/13						
S 600	380	12/05→12/13						
S 63 AMG	400 - 420	03/11→12/13						
↓								

	kW				! #			
MERCEDES-BENZ - S-KLASSE (W221) 09/05→12/13								
Wheel Speed Sensor								
S 65 AMG	463	10/10→12/13	➡	→ A 293047	2	**24.0710-5068.3**	**360537**	L= 675
S 320 CDI S 350 S 500	155 200 285	10/05→12/13 10/05→12/13 10/05→12/13	➡	12/05→; → A 293047	2	**24.0710-5068.3**	**360537**	L= 675
S 450 S 450 4-matic S 500 4-matic S 65 AMG	250 250 285 450	12/05→12/13 12/05→12/13 10/05→12/13 12/05→12/13	➡	04/06→; → A 293047	2	**24.0710-5068.3**	**360537**	L= 675
S 63 AMG	386	10/06→12/13	➡	01/07→; → A 293047	2	**24.0710-5068.3**	**360537**	L= 675
MERCEDES-BENZ - S-KLASSE Coupe (C216) 05/06→12/13								
Wheel Speed Sensor								
CL 500 CL 600	285 380	06/06→12/13 05/06→12/13	➡	07/06→; → A 024306	2	**24.0710-5068.3**	**360537**	L= 675
CL 500 CL 500 4-matic CL 63 AMG CL 65 AMG	320 320 400 - 420 463	02/11→12/13 02/11→12/13 01/10→12/13 02/11→12/13	➡	→ A 024306	2	**24.0710-5068.3**	**360537**	L= 675
CL 500 4-matic	285	02/08→12/13	➡	03/08→; → A 024306	2	**24.0710-5068.3**	**360537**	L= 675
CL 63 AMG CL 65 AMG	386 450	10/06→12/13 10/06→12/10	➡	01/07→; → A 024306	2	**24.0710-5068.3**	**360537**	L= 675
MERCEDES-BENZ - SL (R230) 10/01→01/12								
Wheel Speed Sensor								
280 300 350 500 55 AMG 600 63 AMG 65 AMG	170 170 180 - 232 285 380 368 - 380 386 450	03/08→01/12 04/09→01/12 03/03→01/12 03/06→01/12 03/06→01/12 04/03→01/12 03/08→01/12 03/04→01/12	⬅ ➡		2 2	**24.0710-2083.3** **24.0710-2082.3**	**360604** **360603**	L= 885 L= 950
500 55 AMG 55 AMG Kompressor	225 350 368	10/01→01/12 10/01→06/02 06/02→01/12	⬅ ➡	 F 030152→	2 2	**24.0710-2083.3** **24.0710-2082.3**	**360604** **360603**	L= 885 L= 950
65 AMG Black Series	493	07/08→01/12	⬅ ➡		2 2	**24.0710-2053.3** **24.0710-2082.3**	**360574** **360603**	L= 750 L= 950
MINI - MINI (R56) 11/05→01/14								
Wheel Speed Sensor								
Cooper One D	85 - 90 66	09/06→11/13 06/09→07/10	⬅ ➡	03/10→ 03/10→	2 2	**24.0710-2048.3** **24.0710-2049.3**	**360569** **360570**	L= 134 L= 965
Cooper Cooper S	88 128	10/06→02/12 10/06→02/10	⬅ ➡	11/06→ 11/06→	2 2	**24.0710-2048.3** **24.0710-2049.3**	**360569** **360570**	L= 134 L= 965
Cooper D One	80 70	11/06→09/10 11/06→03/10	⬅ ➡	04/07→ 04/07→	2 2	**24.0710-2048.3** **24.0710-2049.3**	**360569** **360570**	L= 134 L= 965
Cooper D Cooper S Cooper SD Cooper S John Cooper Works John Cooper Works GP One One D	82 120 - 135 100 - 105 147 160 55 - 72 66	06/10→11/13 03/10→11/13 02/11→11/13 01/12→11/13 09/12→11/13 03/09→11/13 07/10→11/13	⬅ ➡		2 2	**24.0710-2048.3** **24.0710-2049.3**	**360569** **360570**	L= 134 L= 965
Cooper S John Cooper Works John Cooper Works	141 155	11/06→02/10 11/07→11/13	⬅ ➡	03/08→ 03/08→	2 2	**24.0710-2048.3** **24.0710-2049.3**	**360569** **360570**	L= 134 L= 965
MINI - MINI Cabriolet (R57) 10/07→06/15								
Wheel Speed Sensor								
Cooper Cooper S	85 120	12/08→06/15 10/07→06/15	⬅ ➡	01/09→ 06/14 01/09→ 06/14	2 2	**24.0710-2048.3** **24.0710-2049.3**	**360569** **360570**	L= 134 L= 965
Cooper ↓	88 - 90	12/08→06/15	⬅		2	**24.0710-2048.3**	**360569**	L= 134

© 2021 Continental Aftermarket & Services GmbH

	kW				! #			
MINI - MINI Cabriolet (R57) 10/07→06/15								
Wheel Speed Sensor								
Cooper S	125 - 141	11/07→07/10	→		2	**24.0710-2049.3**	**360570**	L= 965
Cooper D	82	05/09→11/13	←	06/10→	2	**24.0710-2048.3**	**360569**	L= 134
			→	06/10→	2	**24.0710-2049.3**	**360570**	L= 965
Cooper D	82	02/11→05/15	←	→ 06/14	2	**24.0710-2048.3**	**360569**	L= 134
			→	→ 06/14	2	**24.0710-2049.3**	**360570**	L= 965
Cooper S	128	04/08→07/10	←	01/09→	2	**24.0710-2048.3**	**360569**	L= 134
			→	01/09→	2	**24.0710-2049.3**	**360570**	L= 965
Cooper S	135 - 147	02/10→06/15	←	03/10→ 06/14	2	**24.0710-2048.3**	**360569**	L= 134
One	72	09/09→06/15	→	03/10→ 06/14	2	**24.0710-2049.3**	**360570**	L= 965
Cooper SD	100 - 105	06/09→05/15	←	02/11→ 06/14	2	**24.0710-2048.3**	**360569**	L= 134
			→	02/11→ 06/14	2	**24.0710-2049.3**	**360570**	L= 965
John Cooper Works	155	08/08→05/15	←	03/09→ 06/14	2	**24.0710-2048.3**	**360569**	L= 134
			→	03/09→ 06/14	2	**24.0710-2049.3**	**360570**	L= 965
MINI - MINI CLUBMAN (F54) 11/14→								
Warning Contact, brake pad wear								
John Cooper Works	225	07/19→	→		1	**24.8190-0807.2**	**620807**	
MINI - MINI CLUBMAN (R55) 10/06→12/15								
Wheel Speed Sensor								
Cooper	85 - 90	10/07→06/14	←		2	**24.0710-2048.3**	**360569**	L= 134
Cooper D	80 - 82	10/07→06/14	→		2	**24.0710-2049.3**	**360570**	L= 965
Cooper S	120 - 147	10/07→06/14						
Cooper SD	100 - 105	02/11→06/14						
Cooper S John Cooper Works	141	10/08→02/10						
One	70 - 72	03/09→06/14						
One D	66	03/10→06/14						
Cooper S	128	08/07→07/10	←	09/07→	2	**24.0710-2048.3**	**360569**	L= 134
			→	09/07→	2	**24.0710-2049.3**	**360570**	L= 965
John Cooper Works	155	11/07→06/14	←	03/08→	2	**24.0710-2048.3**	**360569**	L= 134
			→	03/08→	2	**24.0710-2049.3**	**360570**	L= 965
MINI - MINI CLUBVAN (R55) 12/12→06/14								
Wheel Speed Sensor								
Cooper	90	12/12→06/14	←		2	**24.0710-2048.3**	**360569**	L= 134
Cooper D	82	12/12→06/14	→		2	**24.0710-2049.3**	**360570**	L= 965
One	72	12/12→06/14						
MINI - MINI COUNTRYMAN (F60) 10/16→								
Warning Contact, brake pad wear								
John Cooper Works ALL4	225	07/19→	→		1	**24.8190-0807.2**	**620807**	
MINI - MINI COUNTRYMAN (R60) 08/10→10/16								
Wheel Speed Sensor								
Cooper	85 - 90	08/10→10/16	←	09/10→	2	**24.0710-2061.3**	**360582**	L= 154
Cooper D	82	08/10→10/16	→	09/10→	2	**24.0710-2062.3**	**360583**	L= 725
Cooper D ALL4	82	08/10→10/16						
Cooper S	120 - 135	08/10→10/16						
Cooper S ALL4	120 - 135	08/10→10/16						
One	72	08/10→10/16						
One D	66	08/10→10/16						
Cooper ALL4	90	11/12→10/16	←	11/14→	2	**24.0710-2061.3**	**360582**	L= 154
			→	11/14→	2	**24.0710-2062.3**	**360583**	L= 725
Cooper D	82	03/11→10/16	←		2	**24.0710-2061.3**	**360582**	L= 154
Cooper D ALL4	82	03/11→10/16	→		2	**24.0710-2062.3**	**360583**	L= 725
Cooper S	140	07/14→10/16						
↓								

	kW				! #			
MINI - MINI COUNTRYMAN (R60) 08/10→10/16								
Wheel Speed Sensor								
Cooper S ALL4 Cooper SD Cooper SD ALL4 John Cooper Works ALL4	140 100 - 105 100 - 105 160	07/14→10/16 03/11→10/16 03/11→10/16 11/12→10/16	←		2	**24.0710-2061.3**	**360582**	L= 154
			→		2	**24.0710-2062.3**	**360583**	L= 725
Cooper S	147	08/10→10/16	←	02/12→	2	**24.0710-2061.3**	**360582**	L= 154
			→	02/12→	2	**24.0710-2062.3**	**360583**	L= 725
MINI - MINI Coupe (R58) 12/10→05/15								
Wheel Speed Sensor								
Cooper Cooper S Cooper SD Cooper S JCW John Cooper Works	85 - 90 120 - 135 100 - 105 147 155	12/10→04/15 12/10→04/15 12/10→05/15 12/10→04/15 12/10→05/15	←	10/11→	2	**24.0710-2048.3**	**360569**	L= 134
			→	10/11→	2	**24.0710-2049.3**	**360570**	L= 965
MINI - MINI PACEMAN (R61) 03/12→10/16								
Wheel Speed Sensor								
Cooper Cooper D Cooper D ALL4 Cooper S ALL4 Cooper SD Cooper SD ALL4	88 - 90 82 82 120 - 140 105 100 - 105	04/12→09/16 04/12→09/16 03/12→09/16 03/12→09/16 03/12→09/16 04/12→09/16	←	11/12→	2	**24.0710-2061.3**	**360582**	L= 154
			→	11/12→	2	**24.0710-2062.3**	**360583**	L= 725
Cooper ALL4	90	11/12→09/16	←	07/14→	2	**24.0710-2061.3**	**360582**	L= 154
			→	07/14→	2	**24.0710-2062.3**	**360583**	L= 725
Cooper S John Cooper Works	135 - 140 160	11/12→10/16 03/13→10/16	←		2	**24.0710-2061.3**	**360582**	L= 154
			→		2	**24.0710-2062.3**	**360583**	L= 725
MINI - MINI Roadster (R59) 01/11→04/15								
Wheel Speed Sensor								
Cooper Cooper S Cooper SD Cooper S JCW John Cooper Works	85 - 90 120 - 135 100 - 105 147 155	11/11→04/15 11/11→04/15 11/11→04/15 11/11→04/15 11/11→04/15	←	02/12→	2	**24.0710-2048.3**	**360569**	L= 134
			→	02/12→	2	**24.0710-2049.3**	**360570**	L= 965
PEUGEOT - 206 CC (2D) 09/00→12/08								
Brake Booster								
1.6 16V	80	09/00→12/07		Orga 09821→; → 01/07; - ABS; Manual Transmission		**03.7750-6234.4**	**300320**	ATE Ø 9" Pneumatic
				→Orga 09820; - ABS; Manual Transmission		**03.7750-6234.4**	**300320**	ATE Ø 9" Pneumatic
				→Orga 09456; + ABS; Manual Transmission		**03.7750-6234.4**	**300320**	ATE Ø 9" Pneumatic
				Orga 09741→; → 01/07; + ABS; Manual Transmission		**03.7853-2604.4**	**300322**	ATE Ø 9" Pneumatic
				09457→ 09740; + ABS; Manual Transmission		**03.7853-2604.4**	**300322**	ATE Ø 9" Pneumatic
				Orga 09741→; → 01/07; Fully Automatic; + ABS		**03.7853-2704.4**	**300323**	ATE Ø 9" Pneumatic
1.6 HDi 110	80	04/05→02/07		→ 01/07		**03.7853-2604.4** **03.7853-2704.4**	**300322** **300323**	ATE Ø 9" Pneumatic ATE Ø 9" Pneumatic
PEUGEOT - 206 Schrägheck (2A/C) 08/98→12/12								
Brake Booster								
1.1	40	08/98→07/00		09/98→; →Orga 09456; + ABS		**03.7750-6234.4**	**300320**	ATE Ø 9" Pneumatic
				09457→ 09740; + ABS		**03.7853-2604.4**	**300322**	ATE Ø 9" Pneumatic
				Orga 09741→; + ABS		**03.7853-2604.4**	**300322**	ATE Ø 9" Pneumatic
1.1 i ↓	44	09/98→02/07		→Orga 09456; + ABS		**03.7750-6234.4**	**300320**	ATE Ø 9" Pneumatic

© 2021 Continental Aftermarket & Services GmbH

	kW				! #			
PEUGEOT - 206 Schrägheck (2A/C) 08/98→12/12								
Brake Booster								
1.1 i	44	09/98→02/07		09457→ 09740; + ABS		**03.7853-2604.4**	**300322**	ATE Ø 9" Pneumatic
				Orga 09741→; + ABS		**03.7853-2604.4**	**300322**	ATE Ø 9" Pneumatic
1.4 16V	65	10/03→02/08		- ABS		**03.7750-6234.4**	**300320**	ATE Ø 9" Pneumatic
						03.7853-2604.4	**300322**	ATE Ø 9" Pneumatic
1.4 CNG	55	05/06→09/07		+ ABS; Manual Transmission		**03.7853-2604.4**	**300322**	ATE Ø 9" Pneumatic
1.4 LPG	55	05/06→09/07		+ ABS; Fully Automatic		**03.7853-2704.4**	**300323**	ATE Ø 9" Pneumatic
1.4 HDi eco 70	50	09/01→04/09		→Orga 09456; + ABS		**03.7750-6234.4**	**300320**	ATE Ø 9" Pneumatic
				09457→ 09740; + ABS		**03.7853-2604.4**	**300322**	ATE Ø 9" Pneumatic
				Orga 09821→; → 02/09		**03.7853-2604.4**	**300322**	ATE Ø 9" Pneumatic
1.4 i	55	09/98→12/12		→Orga 09456; Manual Transmission; + ABS		**03.7750-6234.4**	**300320**	ATE Ø 9" Pneumatic
				Orga 09741→; → 02/09; Manual Transmission		**03.7853-2604.4**	**300322**	ATE Ø 9" Pneumatic
				09457→ 09740; Manual Transmission; + ABS		**03.7853-2604.4**	**300322**	ATE Ø 9" Pneumatic
				Orga 09741→; → 02/09; Fully Automatic		**03.7853-2704.4**	**300323**	ATE Ø 9" Pneumatic
1.6 16V	79 - 80	07/00→04/09		09821→ 10996; - ABS; Manual Transmission		**03.7750-6234.4**	**300320**	ATE Ø 9" Pneumatic
1.6 BiFuel	80	07/00→04/09		→Orga 09820; - ABS / + ABS; Manual Transmission		**03.7750-6234.4**	**300320**	ATE Ø 9" Pneumatic
				→Orga 09456; Manual Transmission; + ABS		**03.7750-6234.4**	**300320**	ATE Ø 9" Pneumatic
				09741→ 10996; Manual Transmission		**03.7853-2604.4**	**300322**	ATE Ø 9" Pneumatic
				09457→ 09740; Manual Transmission; + ABS		**03.7853-2604.4**	**300322**	ATE Ø 9" Pneumatic
				09741→ 10996; Fully Automatic; + ABS		**03.7853-2704.4**	**300323**	ATE Ø 9" Pneumatic
1.6 HDi 110	80	05/04→02/07				**03.7853-2604.4**	**300322**	ATE Ø 9" Pneumatic
				+ ABS		**03.7853-2704.4**	**300323**	ATE Ø 9" Pneumatic
1.6 i	65	09/98→12/00		Manual Transmission; + ABS		**03.7750-6234.4**	**300320**	ATE Ø 9" Pneumatic
1.9 D	51	09/98→11/01		→Orga 09456; + ABS		**03.7750-6234.4**	**300320**	ATE Ø 9" Pneumatic
				Orga 09457→; + ABS		**03.7853-2604.4**	**300322**	ATE Ø 9" Pneumatic
2.0 HDI 90	66	12/99→09/09		Orga 09821→; → 02/09		**03.7750-6234.4**	**300320**	ATE Ø 9" Pneumatic
				→Orga 09820		**03.7750-6234.4**	**300320**	ATE Ø 9" Pneumatic
				→Orga 09456		**03.7750-6234.4**	**300320**	ATE Ø 9" Pneumatic
				09457→ 09820; + ABS		**03.7853-2604.4**	**300322**	ATE Ø 9" Pneumatic
				Orga 09821→; → 02/09; + ABS		**03.7853-2604.4**	**300322**	ATE Ø 9" Pneumatic
						03.7853-2704.4	**300323**	ATE Ø 9" Pneumatic
PEUGEOT - 206 Stufenheck 03/07→								
Brake Booster								
1.4	55	03/07→		→ 02/09; + ABS; Manual Transmission		**03.7853-2604.4**	**300322**	ATE Ø 9" Pneumatic
				→ 02/09; + ABS; Fully Automatic		**03.7853-2704.4**	**300323**	ATE Ø 9" Pneumatic
1.4 HDi eco 70	50	09/08→		→ 02/09		**03.7853-2604.4**	**300322**	ATE Ø 9" Pneumatic
1.6 16V	80	03/07→		09821→ 10996; - ABS; Manual Transmission		**03.7750-6234.4**	**300320**	ATE Ø 9" Pneumatic
				→Orga 09820; - ABS / + ABS; Manual Transmission		**03.7750-6234.4**	**300320**	ATE Ø 9" Pneumatic
				→Orga 09456; Manual Transmission; + ABS		**03.7750-6234.4**	**300320**	ATE Ø 9" Pneumatic
				09741→ 10996; Manual Transmission		**03.7853-2604.4**	**300322**	ATE Ø 9" Pneumatic
				09457→ 09740; Manual Transmission; + ABS		**03.7853-2604.4**	**300322**	ATE Ø 9" Pneumatic
				09741→ 10996; Fully Automatic; + ABS		**03.7853-2704.4**	**300323**	ATE Ø 9" Pneumatic
PEUGEOT - 206 SW (2E/K) 07/02→								
Brake Booster								
1.1	44	07/02→02/07		→Orga 09456; + ABS		**03.7750-6234.4**	**300320**	ATE Ø 9" Pneumatic
				09457→ 09740; + ABS		**03.7853-2604.4**	**300322**	ATE Ø 9" Pneumatic
				Orga 09741→; + ABS		**03.7853-2604.4**	**300322**	ATE Ø 9" Pneumatic
1.4	55	07/02→02/07		→Orga 09456; Manual Transmission; + ABS		**03.7750-6234.4**	**300320**	ATE Ø 9" Pneumatic
				Orga 09741→; + ABS; Manual Transmission		**03.7853-2604.4**	**300322**	ATE Ø 9" Pneumatic
				09457→ 09740; Manual Transmission; + ABS		**03.7853-2604.4**	**300322**	ATE Ø 9" Pneumatic
↓								

	kW				! #			
PEUGEOT - 206 SW (2E/K) 07/02→								
Brake Booster								
1.4	55	07/02→02/07		Orga 09741→; + ABS; Automatic Transmission		**03.7853-2704.4**	**300323**	ATE Ø 9" Pneumatic
1.4 16V	65	10/03→		→ 05/07; + ABS		**03.7853-2604.4**	**300322**	ATE Ø 9" Pneumatic
1.4 HDi	50	07/02→02/07		→Orga 09456; + ABS		**03.7750-6234.4**	**300320**	ATE Ø 9" Pneumatic
				09457→ 09820; + ABS		**03.7853-2604.4**	**300322**	ATE Ø 9" Pneumatic
				Orga 09821→; + ABS		**03.7853-2604.4**	**300322**	ATE Ø 9" Pneumatic
1.6 16V	80	07/02→		→Orga 09820; Manual Transmission; + ABS		**03.7750-6234.4**	**300320**	ATE Ø 9" Pneumatic
				→Orga 09456; Manual Transmission; + ABS		**03.7750-6234.4**	**300320**	ATE Ø 9" Pneumatic
				Orga 09821→; → 05/07; Manual Transmission; - ABS		**03.7750-6234.4**	**300320**	ATE Ø 9" Pneumatic
				09457→ 09740; Manual Transmission; + ABS		**03.7853-2604.4**	**300322**	ATE Ø 9" Pneumatic
				Orga 09741→; → 05/07; + ABS; Manual Transmission		**03.7853-2604.4**	**300322**	ATE Ø 9" Pneumatic
				Orga 09741→; → 05/07; + ABS; Automatic Transmission		**03.7853-2704.4**	**300323**	ATE Ø 9" Pneumatic
1.6 HDi 110	80	05/04→		→ 05/07; + ABS		**03.7853-2604.4** **03.7853-2704.4**	**300322** **300323**	ATE Ø 9" Pneumatic ATE Ø 9" Pneumatic
1.6 LPG	80	07/02→02/07		Orga 09821→; Manual Transmission; - ABS		**03.7750-6234.4**	**300320**	ATE Ø 9" Pneumatic
				→Orga 09456; Manual Transmission; + ABS		**03.7750-6234.4**	**300320**	ATE Ø 9" Pneumatic
				→Orga 09820; Manual Transmission; + ABS		**03.7750-6234.4**	**300320**	ATE Ø 9" Pneumatic
				09457→ 09740; Manual Transmission; + ABS		**03.7853-2604.4**	**300322**	ATE Ø 9" Pneumatic
				Orga 09741→; + ABS; Manual Transmission		**03.7853-2604.4**	**300322**	ATE Ø 9" Pneumatic
				Orga 09741→; + ABS; Automatic Transmission		**03.7853-2704.4**	**300323**	ATE Ø 9" Pneumatic
2.0 HDi	66	07/02→02/07		→Orga 09820; - ABS		**03.7750-6234.4**	**300320**	ATE Ø 9" Pneumatic
				→Orga 09456; + ABS		**03.7750-6234.4**	**300320**	ATE Ø 9" Pneumatic
				Orga 09821→; - ABS		**03.7750-6234.4**	**300320**	ATE Ø 9" Pneumatic
				Orga 09821→; + ABS		**03.7853-2604.4** **03.7853-2704.4**	**300322** **300323**	ATE Ø 9" Pneumatic ATE Ø 9" Pneumatic
				09457→ 09820; + ABS		**03.7853-2604.4**	**300322**	ATE Ø 9" Pneumatic
PEUGEOT - 206 Van 04/99→03/09								
Brake Booster								
1.1	44	09/02→02/07		→Orga 09456; + ABS		**03.7750-6234.4**	**300320**	ATE Ø 9" Pneumatic
				09457→ 09740; + ABS		**03.7853-2604.4**	**300322**	ATE Ø 9" Pneumatic
				Orga 09741→; + ABS		**03.7853-2604.4**	**300322**	ATE Ø 9" Pneumatic
1.4 HDi	50	09/01→03/09		→Orga 09456; + ABS		**03.7750-6234.4**	**300320**	ATE Ø 9" Pneumatic
				09457→ 09740; + ABS		**03.7853-2604.4**	**300322**	ATE Ø 9" Pneumatic
				Orga 09821→; → 02/09		**03.7853-2604.4**	**300322**	ATE Ø 9" Pneumatic
PEUGEOT - 206+ (2L_, 2M_) 01/09→08/13								
Brake Booster								
1.1 1.1 LPG 1.4 HDi eco 70 1.4 i	44 44 50 54 - 55	01/09→06/13 04/09→06/13 01/09→06/13 01/09→08/13		→ 05/13; + ABS		**03.7853-2604.4**	**300322**	ATE Ø 9" Pneumatic
PEUGEOT - 307 (3A/C) 08/00→12/12								
Wheel Speed Sensor								
1.4 1.4 16V 1.4 HDi 1.6 16V 2.0 16V 2.0 HDi 110 2.0 HDi 135 2.0 HDi 90	55 65 50 80 100 79 100 66	08/00→09/03 11/03→07/07 10/01→06/05 08/00→11/07 08/00→06/05 08/00→03/07 10/03→11/07 08/00→03/07	➡	→Orga 09974; for steel rims	2	**24.0710-2040.3** **24.0710-2044.3**	**360561** **360565**	L= 825 L= 825
			➡	→Orga 09897; with light alloy rim; + ESP	2	**24.0710-2040.3** **24.0710-2044.3**	**360561** **360565**	L= 825 L= 825
			➡	→Orga 09897; - ESP	2	**24.0710-2044.3**	**360565**	L= 825

© 2021 Continental Aftermarket & Services GmbH

	kW				! #			
PEUGEOT - 307 Break (3E) 03/02→12/09								
Wheel Speed Sensor								
1.4 1.4 HDi 1.6 16V 2.0 2.0 HDI 90	55 50 80 100 66	04/02→09/03 03/02→06/05 03/02→04/08 03/02→06/05 03/02→04/08	→	→Orga 09897; with light alloy rim; - ESP	2	**24.0710-2040.3**	**360561**	L= 825
			→	→Orga 09974; with steel rim	2	**24.0710-2040.3** **24.0710-2044.3**	**360561** **360565**	L= 825 L= 825
			→	→Orga 09897; with light alloy rim; + ESP	2	**24.0710-2040.3** **24.0710-2044.3**	**360561** **360565**	L= 825 L= 825
			→	→Orga 09897; - ESP	2	**24.0710-2044.3**	**360565**	L= 825
1.4 16V	65	11/03→07/07	→	→Orga 09974; with steel rim	2	**24.0710-2040.3** **24.0710-2044.3**	**360561** **360565**	L= 825 L= 825
			→	→Orga 09897; with light alloy rim	2	**24.0710-2040.3**	**360561**	L= 825
			→	→Orga 09897; - ESP	2	**24.0710-2044.3**	**360565**	L= 825
			→	→Orga 09897; with light alloy rim; + ESP	2	**24.0710-2044.3**	**360565**	L= 825
2.0 HDI 110	79	03/02→12/09	→	→Orga 09897; with steel rim	2	**24.0710-2040.3**	**360561**	L= 825
			→	→Orga 09897; with light alloy rim; - ESP	2	**24.0710-2040.3**	**360561**	L= 825
			→	→Orga 09897; with light alloy rim; + ESP	2	**24.0710-2040.3** **24.0710-2044.3**	**360561** **360565**	L= 825 L= 825
			→	→Orga 09974; with steel rim	2	**24.0710-2044.3**	**360565**	L= 825
			→	→Orga 09897; - ESP	2	**24.0710-2044.3**	**360565**	L= 825
PEUGEOT - 307 CC (3B) 03/03→06/09								
Wheel Speed Sensor								
2.0 16V	100	10/03→06/05	→	→Orga 09974; for steel rims	2	**24.0710-2040.3**	**360561**	L= 825
			→	→Orga 09897; + ESP; for light alloy rims	2	**24.0710-2040.3**	**360561**	L= 825
			→	09863→ 09897; - ESP	2	**24.0710-2040.3**	**360561**	L= 825
			→	→Orga 09862; - ESP	2	**24.0710-2044.3**	**360565**	L= 825
			→	+ ESP	2	**24.0710-2044.3**	**360565**	L= 825
2.0 16V	130	10/03→04/09	→	09863→ 09897; - ESP	2	**24.0710-2040.3**	**360561**	L= 825
			→	→Orga 09897; + ESP; for light alloy rims	2	**24.0710-2040.3**	**360561**	L= 825
			→	→Orga 09974; for steel rims	2	**24.0710-2040.3**	**360561**	L= 825
			→	→ 02/09; + ESP	2	**24.0710-2044.3**	**360565**	L= 825
			→	→Orga 09862; - ESP	2	**24.0710-2044.3**	**360565**	L= 825
PEUGEOT - 307 SW (3H) 03/02→12/09								
Wheel Speed Sensor								
1.4	55	04/02→09/03	→	→Orga 09897; - ESP	2	**24.0710-2040.3**	**360561**	L= 825
			→	→Orga 09974; with steel rim	2	**24.0710-2040.3**	**360561**	L= 825
			→	→Orga 09897; + ESP; with light alloy rim	2	**24.0710-2040.3**	**360561**	L= 825
			→	→Orga 09897	2	**24.0710-2044.3**	**360565**	L= 825
1.4 16V 1.6 16V 2.0 16V 2.0 HDI 110 2.0 HDI 90	65 80 100 79 66	11/03→07/07 03/02→04/08 03/02→06/05 03/02→12/09 03/02→04/08	→	→Orga 09897; + ESP; for light alloy rims	2	**24.0710-2040.3**	**360561**	L= 825
			→	→Orga 09897; - ESP	2	**24.0710-2040.3**	**360561**	L= 825
			→	→Orga 09974; for steel rims	2	**24.0710-2040.3**	**360561**	L= 825
			→	→Orga 09897	2	**24.0710-2044.3**	**360565**	L= 825
PEUGEOT - 307 SW Kasten/Kombi (3E_, 3H_) 04/02→12/09								
Wheel Speed Sensor								
2.0 HDi	66	04/03→04/08	→	→Orga 09897; with light alloy rim; - ESP	2	**24.0710-2040.3**	**360561**	L= 825
			→	→Orga 09974; with steel rim	2	**24.0710-2040.3** **24.0710-2044.3**	**360561** **360565**	L= 825 L= 825
			→	→Orga 09897; with light alloy rim; + ESP	2	**24.0710-2040.3** **24.0710-2044.3**	**360561** **360565**	L= 825 L= 825
			→	→Orga 09897; - ESP	2	**24.0710-2044.3**	**360565**	L= 825
PORSCHE - TAYCAN (Y1A) 05/19→								
Wheel Speed Sensor								
4S Turbo Turbo S	390 500 560	05/19→ 05/19→ 05/19→	←		2	**24.0710-2067.3**	**360588**	L= 937
			→		2	**24.0710-2059.3**	**360580**	L= 675

	kW				! #			
RENAULT - CLIO III (BR0/1, CR0/1) 01/05→12/14								
Wheel Speed Sensor								
1.2 1.2 16V 1.2 16V Hi-Flex 1.2 Ethanol 1.4 16V 1.5 dCi 1.6 16V 1.6 16V GT	57 43 - 74 55 55 72 48 - 78 65 - 82 94	10/05→12/12 06/05→12/14 07/08→12/12 07/08→12/12 06/05→12/12 05/05→12/14 06/05→12/14 06/09→12/14	➡		2	**24.0710-2038.3**	**360559**	L= 690
1.5 dCi	47	06/05→12/12	➡	+ ESP	2	**24.0710-2038.3**	**360559**	L= 690
RENAULT - CLIO III Grandtour (KR0/1_) 11/07→								
Wheel Speed Sensor								
1.2 16V 1.5 dCi	58 - 76 48 - 76	11/07→12/14 11/07→12/12	➡	+ ESP	2	**24.0710-2038.3**	**360559**	L= 690
1.2 16V 1.2 16V Hi-Flex 1.4 16V 1.5 dCi 1.6 16V	55 55 - 58 72 78 82 - 94	02/08→12/12 11/07→12/12 11/07→12/12 02/08→12/12 11/07→12/12	➡		2	**24.0710-2038.3**	**360559**	L= 690
RENAULT - CLIO III Kasten/Schrägheck (SB_, SR_) 06/05→								
Wheel Speed Sensor								
1.2 1.5 dCi	55 - 74 50 - 78	11/05→12/14 06/05→12/14	➡		2	**24.0710-2038.3**	**360559**	L= 690
RENAULT - FLUENCE (L3_) 02/10→								
Wheel Speed Sensor								
1.5 dCi 1.6 1.6 16V 1.6 dCi 1.6 LPG 16V 2.0 16V Z.E.	63 - 81 86 78 - 82 96 81 103 70	02/10→ 01/13→ 02/10→ 07/14→ 01/12→ 02/10→ 02/12→	➡		2	**24.0710-2041.3**	**360562**	L= 886
RENAULT - GRAND SCÉNIC III (JZ0/1_) 02/09→								
Wheel Speed Sensor								
1.2 TCe 1.4 16V 1.5 dCi 1.6 16V 1.6 16V Bifuel 1.6 dCi 1.6 E85 1.9 dCi 2.0 16V 2.0 dCi	85 - 97 96 63 - 81 81 79 - 81 96 81 96 103 110 - 118	04/12→ 02/09→ 02/09→ 02/09→ 02/09→ 04/11→ 02/09→ 02/09→ 02/09→ 02/09→	➡		2	**24.0710-2041.3**	**360562**	L= 886
RENAULT - MEGANE III Combi Van (KZ0/1) 01/09→08/15								
Wheel Speed Sensor								
1.5 dCi	81	01/09→08/15	➡		2	**24.0710-2041.3**	**360562**	L= 886
RENAULT - MEGANE III Coupe (DZ0/1_) 11/08→								
Wheel Speed Sensor								
1.2 TCe 1.4 TCe 1.5 dCi ↓	85 - 97 96 63 - 81	03/12→08/15 04/09→ 11/08→	➡		2	**24.0710-2041.3**	**360562**	L= 886

© 2021 Continental Aftermarket & Services GmbH

	kW				! #			
RENAULT - MEGANE III Coupe (DZ0/1_) 11/08→								
Wheel Speed Sensor								
1.6 16V	74 - 81	11/08→	➡		2	**24.0710-2041.3**	**360562**	L= 886
1.6 16V Bifuel	81	11/08→						
1.6 dCi	96	04/11→08/15						
1.9 dCi	96	11/08→08/15						
2.0 CVT	103	05/09→						
2.0 dCi	110 - 120	04/09→						
2.0 R.S.	195 - 201	11/08→						
2.0 TCe	132 - 184	11/08→						
2.0 TCe 220	162	11/13→						
RENAULT - MEGANE III Grandtour (KZ0/1) 11/08→								
Wheel Speed Sensor								
1.2 TCe	85 - 97	03/12→	➡		2	**24.0710-2041.3**	**360562**	L= 886
1.4 TCe	96	05/09→						
1.5 dCi	63 - 81	02/09→						
1.6 16V	74 - 81	05/09→						
1.6 BiFuel	81	11/08→						
1.6 dCi	96	04/11→						
1.9 dCi	96	05/09→						
2.0 CVT	103	05/09→						
2.0 dCi	110 - 120	04/09→						
2.0 TCe	132 - 162	11/08→						
RENAULT - MEGANE III Hatchback Van (BZ_) 11/08→08/15								
Wheel Speed Sensor								
1.5 dCi	81	02/09→08/15	➡		2	**24.0710-2041.3**	**360562**	L= 886
RENAULT - MEGANE III Schrägheck (BZ0/1_, B3_) 11/08→								
Wheel Speed Sensor								
1.2 TCe	85 - 97	03/12→	➡		2	**24.0710-2041.3**	**360562**	L= 886
1.4 TCe	96	04/09→						
1.5 dCi	63 - 81	11/08→						
1.5 DCI	81	02/09→08/15						
1.6 16V	74 - 85	11/08→						
1.6 16V BiFuel	81	05/09→08/15						
1.6 16V Hi-Flex	81	11/08→08/15						
1.6 dCi	96	04/11→08/15						
1.9 dCi	96	11/08→						
2.0 CVT	103	02/09→						
2.0 dCi	110 - 120	04/09→						
2.0 TCe	132 - 140	11/08→						
2.0 TCe 220	162	11/13→						
RENAULT - MEGANE CC (EZ0/1_) 06/10→								
Wheel Speed Sensor								
1.2 TCe	97	01/13→	➡		2	**24.0710-2041.3**	**360562**	L= 886
1.4 TCe	96	06/10→						
1.5 dCi	81	06/10→						
1.6 16V	81	06/10→						
1.6 16V Hi-Flex	81	06/10→						
1.6 dCi	96	04/11→						
1.9 dCi	96	06/10→						
2.0 CVT	103	06/10→						
2.0 dCi	118	06/10→						
2.0 TCe	132	06/10→						
RENAULT - MODUS / GRAND MODUS (F/JP0_) 09/04→								
Wheel Speed Sensor								
1.2	48 - 58	12/04→	➡	+ ESP	2	**24.0710-2038.3**	**360559**	L= 690
1.2 16V	74	05/07→						
1.2 16V Hi-Flex	55	10/08→						
1.4	72	12/04→						
↓								

	kW				! #			
RENAULT - MODUS / GRAND MODUS (F/JP0_) 09/04→								
Wheel Speed Sensor								
1.5 dCi	50 - 78	09/04→	➡	+ ESP	2	**24.0710-2038.3**	**360559**	L= 690
1.6	65 - 82	12/04→						
RENAULT - SANDERO/STEPWAY I (BS_) 11/07→								
Wheel Speed Sensor								
1.4	55	02/09→	➡			**24.0710-2042.3**	**360563**	L= 505
1.6	64	02/09→	➡			**24.0710-2043.3**	**360564**	L= 534
RENAULT - SCÉNIC III (JZ0/1_) 12/08→								
Wheel Speed Sensor								
1.2 TCe	85 - 97	04/12→	➡		2	**24.0710-2041.3**	**360562**	L= 886
1.4 16V	96	02/09→						
1.5 dCi	63 - 81	02/09→						
1.6 16V	81	02/09→						
1.6 16V Bifuel	79 - 81	02/09→						
1.6 dCi	96	04/11→						
1.6 E85	81	02/09→						
1.9 dCi	96	02/09→						
2.0 16V	103	02/09→						
2.0 dCi	110 - 118	02/09→						
RENAULT - SCÉNIC III VAN (JZ0/1_) 12/08→								
Wheel Speed Sensor								
1.4 TCe	96	01/13→	➡		2	**24.0710-2041.3**	**360562**	L= 886
1.5 dCi	70 - 81	04/09→						
1.6 dCi	96	01/13→						
1.6 VVT	81	01/13→						
1.9 dCi	96	01/13→						
RENAULT - TWINGO II (CN0_) 03/07→								
Wheel Speed Sensor								
1.2	43	03/07→09/14	➡			**24.0710-2052.3**	**360573**	L= 1,710
1.2 16V	55 - 56	03/07→						
1.2 TCe 100	75	02/11→						
1.2 Turbo	74	03/07→09/14						
1.5 dCi	47 - 62	03/07→09/14						
1.5 dCi 75	55	10/10→						
1.5 dCi 90	63	10/10→						
SEAT - ARONA (KJ7) 07/17→								
Brake Disc								
1.0 TGi	66	11/18→	⬅	+PR 1ZG		**24.0122-0312.1**	**422312**	Ø 256 Brake Disc Thickness [mm] 22 Minimum thickness [mm] 19 Vented + S
1.0 TSI	70 - 85	07/17→						
1.5 TSI	110	07/17→						
1.6 SRE	81	07/17→						
1.6 TDI	70 - 85	07/17→						
SEAT - IBIZA V (KJ1) 01/17→								
Brake Disc								
1.0	48 - 55	01/17→	⬅	+PR 1ZG		**24.0122-0312.1**	**422312**	Ø 256 Brake Disc Thickness [mm] 22 Minimum thickness [mm] 19 Vented + S
1.0 MPi	59	07/18→						
1.0 TGI	66	11/17→						
1.0 TSI	70 - 85	01/17→						
1.5 TSI	110	07/17→						
1.6	81	05/17→						
1.6 TDI	59 - 85	09/17→						

© 2021 Continental Aftermarket & Services GmbH

	kW				! #			
SKODA - KAMIQ (NW4) 07/19→								
Brake Disc								
1.0 TGI CNG 1.0 TSI 1.5 TSI 1.6 SRE 1.6 TDI	66 70 - 85 110 81 70 - 85	11/19→ 07/19→ 07/19→ 07/19→ 07/19→	←	+PR 1ZG		**24.0122-0312.1**	**422312**	Ø 256 Brake Disc Thickness [mm] 22 Minimum thickness [mm] 19 Vented + S
SKODA - SCALA (NW1) 02/19→								
Brake Disc								
1.0 TGI CNG 1.0 TSI 1.5 TSI 1.6 TDI	66 70 - 85 110 85	11/19→ 02/19→ 02/19→ 02/19→	←	+PR 1ZG		**24.0122-0312.1**	**422312**	Ø 256 Brake Disc Thickness [mm] 22 Minimum thickness [mm] 19 Vented + S
SUBARU - FORESTER (SF_) 03/97→09/02								
Brake Pad Set, disc brake								
2.0 S Turbo AWD	125	06/98→04/01	→	07/98→		**13.0460-5697.2**	**605697**	AKE + WK + Zub
2.0 S Turbo AWD	130	04/01→09/02	→	09/02→		**13.0460-5697.2**	**605697**	AKE + WK + Zub
SUBARU - FORESTER (SG_) 02/02→12/12								
Brake Pad Set, disc brake								
2.0 S Turbo AWD	130	02/02→05/05	→	09/02→ 05/03		**13.0460-5697.2**	**605697**	AKE + WK + Zub
2.5 RX Nato AWD	115	11/02→12/08	→	→ 04/03		**13.0460-5697.2**	**605697**	AKE + WK + Zub
SUBARU - IMPREZA Station Wagon (GF) 08/92→12/00								
Brake Pad Set, disc brake								
2.0 Turbo GT AWD	160	06/98→12/00	→			**13.0460-5697.2**	**605697**	AKE + WK + Zub
SUBARU - IMPREZA Station Wagon (GG) 10/00→12/08								
Brake Pad Set, disc brake								
2.0 AWD	92	12/00→12/07	→	→ 10/02		**13.0460-5697.2**	**605697**	AKE + WK + Zub
SUBARU - IMPREZA Stufenheck (GC) 08/92→09/01								
Brake Pad Set, disc brake								
2.0 Turbo GT AWD	160	06/98→12/00	→			**13.0460-5697.2**	**605697**	AKE + WK + Zub
SUBARU - IMPREZA Stufenheck (GD) 09/99→06/09								
Brake Pad Set, disc brake								
2.0 i AWD	92	12/00→06/09	→	→ 09/05		**13.0460-5697.2**	**605697**	AKE + WK + Zub
2.5 AWD	130	03/01→09/05	→			**13.0460-5697.2**	**605697**	AKE + WK + Zub
SUBARU - LEGACY III (BE) 10/98→08/03								
Brake Pad Set, disc brake								
2.0 AWD	92	04/99→08/03	→	+ ABS		**13.0460-5697.2**	**605697**	AKE + WK + Zub
2.5 AWD	115	10/98→08/03	→			**13.0460-5697.2**	**605697**	AKE + WK + Zub
SUBARU - LEGACY III Station Wagon (BH) 10/98→08/03								
Brake Pad Set, disc brake								
2.0 AWD	92	12/98→08/03	→	04/99→; + ABS		**13.0460-5697.2**	**605697**	AKE + WK + Zub
2.5 AWD	115	12/98→08/03	→			**13.0460-5697.2**	**605697**	AKE + WK + Zub
SUBARU - LEGACY IV (BL) 09/03→12/15								
Brake Pad Set, disc brake								
2.0 2WD 2.0 AWD	132 121	08/05→03/12 06/05→04/09	→			**13.0460-5697.2**	**605697**	AKE + WK + Zub
3.0 R AWD	180	09/03→08/09	→	→ 06/09		**13.0460-5697.2**	**605697**	AKE + WK + Zub
SUBARU - LEGACY IV Station Wagon (BP) 09/03→12/09								
Brake Pad Set, disc brake								
2.0 AWD	121	06/05→04/09	→			**13.0460-5697.2**	**605697**	AKE + WK + Zub
3.0 R AWD	180	09/03→08/09	→	→ 06/09		**13.0460-5697.2**	**605697**	AKE + WK + Zub

© 2021 Continental Aftermarket & Services GmbH

	kW				! #			
SUBARU - OUTBACK (BE, BH) 10/98→08/03								
Brake Pad Set, disc brake								
2.5 AWD 3.0 H6 AWD	115 154	10/00→08/03 10/00→08/03	→			**13.0460-5697.2**	**605697**	AKE + WK + Zub
SUBARU - OUTBACK (BL, BP) 09/03→06/10								
Brake Pad Set, disc brake								
2.5 AWD	121	11/03→09/09	→	→ 04/09		**13.0460-5697.2**	**605697**	AKE + WK + Zub
3.0 AWD	180	11/03→09/09	→	→ 06/09		**13.0460-5697.2**	**605697**	AKE + WK + Zub
VW - CRAFTER 30-35 Bus (2E_) 04/06→12/16								
Wheel Speed Sensor								
2.0 TDI	80 - 100	05/11→12/16	←	07/11→; Manufacturer Restriction Bosch	2	**24.0710-2045.3**	**360566**	L= 965
2.0 TDI 2.0 TDI 4motion 2.5 TDI	84 - 120 120 65 - 120	07/11→12/16 11/11→12/16 04/06→05/13	←	Manufacturer Restriction Bosch	2	**24.0710-2045.3**	**360566**	L= 965
VW - CRAFTER 30-50 Kasten (2E_) 04/06→12/16								
Wheel Speed Sensor								
2.0 TDI	80 - 100	05/11→12/16	←	07/11→; Manufacturer Restriction Bosch	2	**24.0710-2045.3**	**360566**	L= 965
2.0 TDI 2.5 TDI	84 - 120 65 - 120	07/11→12/16 04/06→05/13	←	Manufacturer Restriction Bosch	2	**24.0710-2045.3**	**360566**	L= 965
2.0 TDI 4motion	120	07/11→12/16	←	11/11→; Manufacturer Restriction Bosch	2	**24.0710-2045.3**	**360566**	L= 965
VW - CRAFTER 30-50 Pritsche/Fahrgestell (2F_) 04/06→12/16								
Wheel Speed Sensor								
2.0 TDI	80 - 100	05/11→12/16	←	07/11→; Manufacturer Restriction Bosch	2	**24.0710-2045.3**	**360566**	L= 965
2.0 TDI 2.0 TDI 4motion 2.5 TDI	84 - 120 120 65 - 120	07/11→12/16 11/11→12/16 04/06→05/13	←	Manufacturer Restriction Bosch	2	**24.0710-2045.3**	**360566**	L= 965
VW - POLO VI (AW1, BZ1) 06/17→								
Brake Disc								
1.0 1.0 TSI	48 - 55 70	06/17→ 06/17→	←	09/17→; +PR 1ZG / 1ZJ		**24.0122-0312.1**	**422312**	Ø 256 Brake Disc Thickness [mm] 22 Minimum thickness [mm] 19 Vented + S
1.0 MPi 1.0 TGI 1.0 TSI 1.5 TSI 1.6 TDI 2.0 GTI	59 66 81 - 85 110 59 - 70 147	09/18→ 09/17→ 09/17→ 10/18→ 11/17→ 11/17→	←	+PR 1ZG / 1ZJ		**24.0122-0312.1**	**422312**	Ø 256 Brake Disc Thickness [mm] 22 Minimum thickness [mm] 19 Vented + S

© 2021 Continental Aftermarket & Services GmbH

EN Technical translations

DE Technische Übersetzungen

ES Traducciones tecnicas

FR Traductions techniques

IT Traduzioni tecniche

07/2021

© 2021 Continental Aftermarket & Services GmbH

Technical translations

Technische Übersetzungen - Traducciones tecnicas - Traductions techniques - Traduzioni tecniche

EN	
	Brake Pad Set, disc brake
	Wheel Speed Sensor
	Brake Booster
	Brake Caliper
	Brake Disc
	Brake Hose
	Rear Axle Left
	Rear Axle Right
	Front Axle Left
	Front Axle Right
+ ABS	for vehicles with ABS
+ ESP	for vehicles with ESP
+PR	for PR number
+ S	with bolts/screws
+ WK	with acoustic wear warning
+ Zub	with accessories
- ABS	for vehicles without ABS
AKE	Brake System, Akebono
ATE Ceramic	additional article information, ATE Ceramic
Automatic Transmission	Automatic Transmission
B	Coated
Bolt Hole Circle Ø [mm]	Bolt Hole Circle Ø [mm]
Bore Ø [mm]	Bore Ø [mm]
Brake Booster	Brake Booster
Brake Caliper	Brake Caliper
Brake Disc	Brake Disc

EN	
Brake Disc Thickness [mm]	Brake Disc Thickness [mm]
Brake Hose	Brake Hose
Brake Pad Set, disc brake	Brake Pad Set, disc brake
Centering Diameter [mm]	Centering Diameter [mm]
Disc Brake	Disc Brake
- ESP	for vehicles without ESP
for light alloy rims	for light alloy rims
for steel rims	for steel rims
for vehicles with 3rd seating row	for vehicles with 3rd seating row
for vehicles with AMG Sports Package	for vehicles with AMG Sports Package
for vehicles without 3rd seating row	for vehicles without 3rd seating row
for vehicles without AMG sports package	for vehicles without AMG sports package
for vehicles without sports brake system	for vehicles without sports brake system
for vehicles without sports package	for vehicles without sports package
for vehicles with sports brake system	for vehicles with sports brake system
Fully Auto-matic	Fully Automatic
Generic article	Generic article
HC L	Alloyed / High-carbon
Height [mm]	Height [mm]

© 2021 Continental Aftermarket & Services GmbH

Technical translations

Technische Übersetzungen - Traducciones tecnicas - Traductions techniques - Traduzioni tecniche

EN	
Information Type	Information Type
L=	Length [mm]
L=	Overall Length [mm] Cable Length [mm]
Machining	Machining
Manual Transmission	Manual Transmission
Manufacturer Restriction	Manufacturer Restriction
Minimum thickness [mm]	Minimum thickness [mm]
Number of Holes	Number of Holes
Orga →	RPO number from
Piston Diameter [mm]	Piston Diameter [mm]
Pneumatic	Pneumatic
Sensor, wheel speed	Sensor, wheel speed
Service exchange part	Service exchange part
Spanner size 1 [mm]	Spanner size 1 [mm]
Surface	Surface
Thickness [mm]	Thickness [mm]
Warning Contact, brake pad wear	Warning Contact, brake pad wear
- WE	not prepared for wear indicator
Width [mm]	Width [mm]
with anti-squeak plate	with anti-squeak plate
with brake caliper screws	with brake caliper screws
with light alloy rim	with light alloy rim
without cable	without cable
with steel rim	with steel rim

EN	
- WK	excl. wear warning contact
Ø	Inner diameter [mm] Outer diameter [mm]
Ø "	Diameter [in]
→	Construction year from Vehicle Identification Number from
→	Construction year to Vehicle Identification Number to
→Orga	RPO number to

© 2021 Continental Aftermarket & Services GmbH

Technical translations

Technische Übersetzungen - Traducciones tecnicas - Traductions techniques - Traduzioni tecniche

DE	
	Bremsbelagsatz, Scheibenbremse
	Raddrehzahlsensor
	Bremskraftverstärker
	Bremssattel
	Bremsscheibe
	Bremsschlauch
	Hinterachse links
	Hinterachse rechts
	Vorderachse links
	Vorderachse rechts
+ ABS	für Fahrzeuge mit ABS
+ ESP	für Fahrzeuge mit ESP
+PR	für PR-Nummer
+ S	mit Schrauben
+ WK	mit akustischer Verschleißwarnung
+ Zub	mit Zubehör
- ABS	für Fahrzeuge ohne ABS
AKE	Bremssystem, Akebono
ATE Ceramic	Artikelzusatzbezeichnung, ATE Ceramic
Automatic Transmission	Automatikgetriebe
B	beschichtet
Bolt Hole Circle Ø [mm]	Lochkreis-Ø [mm]
Bore Ø [mm]	Bohrung-Ø [mm]
Brake Booster	Bremskraftverstärker
Brake Caliper	Bremssattel
Brake Disc	Bremsscheibe

DE	
Brake Disc Thickness [mm]	Bremsscheibendicke [mm]
Brake Hose	Bremsschlauch
Brake Pad Set, disc brake	Bremsbelagsatz, Scheibenbremse
Centering Diameter [mm]	Zentrierungsdurchmesser [mm]
Disc Brake	Scheibenbremse
- ESP	für Fahrzeuge ohne ESP
for light alloy rims	für Leichtmetallfelgen
for steel rims	für Stahlfelgen
for vehicles with 3rd seating row	für Fahrzeuge mit 3. Sitzreihe
for vehicles with AMG Sports Package	für Fahrzeuge mit AMG-Sportpaket
for vehicles without 3rd seating row	für Fahrzeuge ohne 3. Sitzreihe
for vehicles without AMG sports package	für Fahrzeuge ohne AMG-Sportpaket
for vehicles without sports brake system	für Fahrzeuge ohne Sportbremsanlage
for vehicles without sports package	für Fahrzeuge ohne Sportpaket
for vehicles with sports brake system	für Fahrzeuge mit Sportbremsanlage
Fully Auto-matic	Vollautomatik
Generic article	Generischer Artikel
HC L	legiert/hochgekohlt
Height [mm]	Höhe [mm]

© 2021 Continental Aftermarket & Services GmbH

Technical translations

Technische Übersetzungen - Traducciones tecnicas - Traductions techniques - Traduzioni tecniche

DE	
Information Type	Informationsart
L=	Länge [mm]
L=	Länge über Alles [mm] Kabellänge [mm]
Machining	Bearbeitung
Manual Transmission	Schaltgetriebe
Manufacturer Restriction	Herstellereinschränkung
Minimum thickness [mm]	Mindestdicke [mm]
Number of Holes	Lochanzahl
Orga →	Organisationsnummer ab
Piston Diameter [mm]	Kolbendurchmesser [mm]
Pneumatic	pneumatisch
Sensor, wheel speed	Sensor, Raddrehzahl
Service exchange part	Austauschteil
Spanner size 1 [mm]	Schlüsselweite 1 [mm]
Surface	Oberfläche
Thickness [mm]	Dicke/Stärke [mm]
Warning Contact, brake pad wear	Warnkontakt, Bremsbelagverschleiß
- WE	nicht für Verschleißwarnanzeiger vorbereitet
Width [mm]	Breite [mm]
with anti-squeak plate	mit Anti-Quietsch-Blech
with brake caliper screws	mit Bremssattelschrauben
with light alloy rim	mit Leichtmetallfelge
without cable	ohne Kabel
with steel rim	mit Stahlfelge

DE	
- WK	exkl. Verschleißwarnkontakt
Ø	Innendurchmesser [mm] Außendurchmesser [mm]
Ø "	Durchmesser [Zoll]
→	Baujahr ab Fahrgestellnummer ab
→	Baujahr bis Fahrgestellnummer bis
→Orga	Organisationsnummer bis

© 2021 Continental Aftermarket & Services GmbH

Technical translations

Technische Übersetzungen - Traducciones tecnicas - Traductions techniques - Traduzioni tecniche

ES	
	Juego de pastillas de freno
	Sensor de velocidad de la rueda
	Servofrenos
	Pinza de freno
	Disco de freno
	Tubo flexible de frenos
	Eje trasero izquierda
	Eje trasero, derecha
	Eje delantero, izquierda
	Eje delantero, derecha
+ ABS	para vehículos con ABS
+ ESP	para vehículos con ESP
+PR	Número de PR
+ S	con tornillos
+ WK	con avisador acústico de desgaste
+ Zub	con accesorios
- ABS	para vehículos sin ABS
AKE	Sistema de frenos, Akebono
ATE Ceramic	Denominación adicional del artículo, ATE Ceramic
Automatic Transmission	Transmisión automática
B	revestido
Bolt Hole Circle Ø [mm]	corona de agujeros - Ø [mm]
Bore Ø [mm]	Taladro Ø [mm]
Brake Booster	Servofrenos
Brake Caliper	Pinza de freno
Brake Disc	Disco de freno

ES	
Brake Disc Thickness [mm]	Espesor de disco de frenos [mm]
Brake Hose	Tubo flexible de frenos
Brake Pad Set, disc brake	Juego de pastillas de freno
Centering Diameter [mm]	Diámetro de centrado [mm]
Disc Brake	Discos
- ESP	para vehículos sin ESP
for light alloy rims	para llantas de metal ligero
for steel rims	para llantas de acero
for vehicles with 3rd seating row	para vehículos con 3 hileras de asientos
for vehicles with AMG Sports Package	para vehículos con paquete sport AMG
for vehicles without 3rd seating row	para vehículoos sin 3 hileras de asientos
for vehicles without AMG sports package	para vehículos sin paquete deportivo AMG
for vehicles without sports brake system	para vehículos sin sistema de frenos deportivos
for vehicles without sports package	para vehículos sin paquete sport
for vehicles with sports brake system	para vehículos con sistema de frenos deportivos
Fully Auto-matic	completamente automática
Generic article	Número de artículo genérico
HC L	aleado/alt. carburado
Height [mm]	Altura [mm]

© 2021 Continental Aftermarket & Services GmbH

Technical translations

Technische Übersetzungen - Traducciones tecnicas - Traductions techniques - Traduzioni tecniche

ES	
Information Type	Tipo información
L=	Longitud [mm]
L=	Longitud total [mm] Longitud de cable [mm]
Machining	Procesamiento
Manual Transmission	Caja de cambios manual
Manufacturer Restriction	Restricción de fabricante
Minimum thickness [mm]	Espesor mínimo [mm]
Number of Holes	Número de orificios
Orga →	nº de organización desde
Piston Diameter [mm]	Diámetro del pistón [mm]
Pneumatic	neumático
Sensor, wheel speed	Sensor, revoluciones de la rueda
Service exchange part	Pieza de intercambio
Spanner size 1 [mm]	Ancho de llave 1 [mm]
Surface	Superficie
Thickness [mm]	Espesor [mm]
Warning Contact, brake pad wear	Contacto de aviso, desgaste de los frenos
- WE	no preparado para indicador de desgaste
Width [mm]	Ancho [mm]
with anti-squeak plate	Chapa antichirridos
with brake caliper screws	con tornillos pinza freno
with light alloy rim	con llantas de aleación ligera
without cable	sin cable
with steel rim	con llantas de acero

ES	
- WK	excl. contacto de avisador de desgaste
Ø	Diámetro interior [mm] Diámetro exterior [mm]
Ø "	Diámetro [in]
→	año construcción desde nº de chasis desde
→	año construcción hasta nº de chasis hasta
→Orga	nº de organización hasta

© 2021 Continental Aftermarket & Services GmbH

Technical translations

Technische Übersetzungen - Traducciones tecnicas - Traductions techniques - Traduzioni tecniche

FR	
	Kit de plaquettes de frein, frein à disque
	Capteur de vitesse de roue
	Dispositif d'assistance de frein
	Étrier de frein
	Disque de frein
	Flexible de frein
	Essieu arrière gauche
	Essieu arrière droit
	Essieu avant gauche
	Essieu avant droit
+ ABS	pour véhicules avec système antiblo-cage
+ ESP	pour véhicules avec ESP
+PR	pour numéro PR
+ S	avec vis/boulons
+ WK	avec indicateur d'usure
+ Zub	avec accessoires
- ABS	pour véhicules sans système antiblo-cage
AKE	Système de freinage, Akebono
ATE Ceramic	Designation d'article complémentaire, ATE Ceramic
Automatic Transmission	Boîte automatique
B	revêtu
Bolt Hole Circle Ø [mm]	Cercle de percage -Ø [mm]
Bore Ø [mm]	Alésage-Ø
Brake Booster	Dispositif d'assistance de frein
Brake Caliper	Étrier de frein

FR	
Brake Disc	Disque de frein
Brake Disc Thickness [mm]	Épaisseur du disque de frein [mm]
Brake Hose	Flexible de frein
Brake Pad Set, disc brake	Kit de plaquettes de frein, frein à disque
Centering Diameter [mm]	Diamètre du centrage [mm]
Disc Brake	Frein à disque
- ESP	pour véhicules sans ESP
for light alloy rims	pour jante en alliage léger
for steel rims	pour jante en acier
for vehicles with 3rd seating row	pour véhicules avec 3ième rangée de sièges
for vehicles with AMG Sports Package	pour véhicules avec équipement-sport AMG
for vehicles without 3rd seating row	pour véhicules sans 3ième rangée de sièges
for vehicles without AMG sports package	pour véhicules sans paquet-sport AMG
for vehicles without sports brake system	pour véhicules sans système de freinage sport
for vehicles without sports package	pour véhicules sans équipement sport
for vehicles with sports brake system	pour véhicules avec système de freinage sport
Fully Auto-matic	entièrement automatique
Generic article	Référence générique de l'article
HC L	allié/carbonisé
Height [mm]	Hauteur [mm]

© 2021 Continental Aftermarket & Services GmbH

Technical translations

Technische Übersetzungen - Traducciones tecnicas - Traductions techniques - Traduzioni tecniche

FR	
Information Type	Genre d'information
L=	Longueur [mm]
L=	Longueur globale Longueur câble [mm]
Machining	Traitement
Manual Transmission	boîte de vitesses manuelle
Manufacturer Restriction	Montage d'origine
Minimum thickness [mm]	Épaisseur minimum [mm]
Number of Holes	Nombre de trous
Orga →	Nº d'organisation à partir de
Piston Diameter [mm]	Diamètre du piston [mm]
Pneumatic	pneumatique
Sensor, wheel speed	Capteur, vitesse de roue
Service exchange part	Echange standard
Spanner size 1 [mm]	Largeur de clé 1 [mm]
Surface	Surface
Thickness [mm]	Épaisseur [mm]
Warning Contact, brake pad wear	Contact d'avertissement, usure des plaquettes de frein
- WE	non préparé pour indicateur d'usure
Width [mm]	Largeur [mm]
with anti-squeak plate	avec tôle anti-bruit
with brake caliper screws	avec vis d'étrier de frein
with light alloy rim	avec jante en alliage léger
without cable	sans câble
with steel rim	avec jante en acier

FR	
- WK	contact de signal d'usure exclu
Ø	Diamètre intérieur [mm] Diamètre extérieur [mm]
Ø "	Diamètre [pouces]
→	Année à partir de Nº de châssis à partir de
→	Année jusqu'à Nº de châssis jusqu'à
→Orga	Nº d'organisation jusqu'à

© 2021 Continental Aftermarket & Services GmbH

Technical translations

Technische Übersetzungen - Traducciones tecnicas - Traductions techniques - Traduzioni tecniche

IT	
	Kit pastiglie freno, Freno a disco
	Sensore velocità ruote
	Servofreno
	Pinza freno
	Discofreno
	Flessibile del freno
	Assale posteriore Sx
	Assale posteriore Dx
	Assale anteriore Sx
	Assale anteriore Dx
+ ABS	per veicoli con ABS
+ ESP	per veicoli con ESP
+PR	per N° PR
+ S	con bulloni/viti
+ WK	con segnalatore acustico usura
+ Zub	con accessori
- ABS	per veicoli senza ABS
AKE	Sistema frenante, Akebono
ATE Ceramic	Denominazione aggiuntiva dell'articolo, ATE Ceramic
Automatic Transmission	Trasmissione automatica
B	rivestito
Bolt Hole Circle Ø [mm]	Cerchio foro-Ø [mm]
Bore Ø [mm]	Alesaggio-Ø [mm]
Brake Booster	Servofreno
Brake Caliper	Pinza freno
Brake Disc	Discofreno

IT	
Brake Disc Thickness [mm]	Spessore disco freno [mm]
Brake Hose	Flessibile del freno
Brake Pad Set, disc brake	Kit pastiglie freno, Freno a disco
Centering Diameter [mm]	Diametro centraggio [mm]
Disc Brake	Freno a disco
- ESP	per veicoli senza ESP
for light alloy rims	per cerchioni in lega leggera
for steel rims	per cerchioni in acciaio
for vehicles with 3rd seating row	per veicoli con 3ª fila sedili
for vehicles with AMG Sports Package	per veicoli con pacchetto sportivo AMG
for vehicles without 3rd seating row	per veicoli senza 3ª fila sedili
for vehicles without AMG sports package	per veicoli senza pacchetto sportivo AMG
for vehicles without sports brake system	per veicoli senza impianti frenante sportivo
for vehicles without sports package	per veicoli senza pacchetto sportivo
for vehicles with sports brake system	per veicoli con impianto frenante sportivo
Fully Automatic	Interamente automatizzato
Generic article	Numero generico dell'articolo
HC L	legato /ad alto tenore di carbonio
Height [mm]	Altezza [mm]

© 2021 Continental Aftermarket & Services GmbH

Technical translations

Technische Übersetzungen - Traducciones tecnicas - Traductions techniques - Traduzioni tecniche

IT	
Information Type	Tipo informazione
L=	Lunghezza [mm]
L=	Lunghezza totale [mm] Lunghezza cavo [mm]
Machining	Lavorazione/Trattamento
Manual Transmission	Cambio manuale
Manufacturer Restriction	Limitazione costruttore
Minimum thickness [mm]	Spessore min. [mm]
Number of Holes	N° fori
Orga →	N° organizzazione da
Piston Diameter [mm]	Diametro pistone [mm]
Pneumatic	pneumatico
Sensor, wheel speed	Sensore, N° giri ruota
Service exchange part	Ricambio di rotazione
Spanner size 1 [mm]	Apertura chiave 1 [mm]
Surface	Superficie
Thickness [mm]	Spessore [mm]
Warning Contact, brake pad wear	Contatto segnalazione, Usura past. freno/mat. d'attrito
- WE	Non predisposto per contatto segnalazione usura
Width [mm]	Larghezza [mm]
with anti-squeak plate	con lamierino anticigolío
with brake caliper screws	con bulloni pinza freno
with light alloy rim	con cerchioni in lega leggera
without cable	senza cavo
with steel rim	con cerchione in acciaio

IT	
- WK	senza contatto segnalazione usura
Ø	Diametro interno [mm] Diametro esterno [mm]
Ø "	Diametro [pollici]
→	Anno da N° telaio da
→	Anno fino a N° telaio fino a
→Orga	N° organizzazione fino a

© 2021 Continental Aftermarket & Services GmbH

Notes

© 2021 Continental Aftermarket & Services GmbH

ATE – A Trademark of the Continental Corporation

Continental Aftermarket & Services GmbH

Sodener Straße 9
D-65824 Schwalbach
Tel. +49 (0) 6196 87 0
Fax +49 (0) 6196 865 71

www.ate.de

Continental Automotive Trading Italia S.r.l.

Segmento IAM – ATE
Via G. Matteotti, 62
I-20092 Cinisello Balsamo (MI)
Tel. +39 02 35680 1
Fax +39 02 35680 325
E-Mail: supporto@ continental-corporation.com

www.ate-freni.it

Continental Automotive France SAS

6 rue Jean Moulin
F-78120 Rambouillet
Tél. +33 (0) 9 69 37 37 37
E-Mail: 07GYFMAte-technique@ continental-corporation.com

www.ate-freinage.fr

Continental Automotive Spain, S.A.

C/ Sepúlveda, 11
E-28108 Alcobendas (Madrid)
Tel. +34 (0) 91 657 21 21
Fax +34 (0) 91 657 21 49

www.frenos-ate.es