New partnumbers on stock

according to ATE pn.

03/2018

BAH - Drum brake shoes rear

03.0137-0517.2	**650517**	HYUNDAI	i20 / i20 COUPE (GB) (14-)	1,0 T-GDI		01.2016		58305-3XA00 , 58305-C7A00	
		HYUNDAI	i20 / i20 COUPE (GB) (14-)	1,1 blue CRDi		12.2014		58305-3XA00 , 58305-C7A00	
		HYUNDAI	i20 / i20 COUPE (GB) (14-)	1,1 CRDi		12.2014		58305-3XA00 , 58305-C7A00	
		HYUNDAI	i20 / i20 COUPE (GB) (14-)	1,2		12.2014		58305-3XA00 , 58305-C7A00	
		HYUNDAI	i20 / i20 COUPE (GB) (14-)	1,2 LPGI		11.2014		58305-3XA00 , 58305-C7A00	
		HYUNDAI	i20 / i20 COUPE (GB) (14-)	1,4		12.2014		58305-3XA00 , 58305-C7A00	
		HYUNDAI	i20 / i20 COUPE (GB) (14-)	1,4 CRDi		12.2014		58305-3XA00 , 58305-C7A00	
		HYUNDAI	i20 ACTIVE (GB) (15-)	1,0 T-GDI		09.2015		58305-3XA00 , 58305-C7A00	
		KIA	RIO III (UB) (11-17)	1,1 CRDi		09.2011		58305-3XA00 , 58305-C7A00	
		KIA	RIO III (UB) (11-17)	1,4 CVVT		09.2011		58305-3XA00 , 58305-C7A00	
		KIA	RIO III (UB) (11-17)	1,4 CRDi		09.2011		58305-3XA00 , 58305-C7A00	
		KIA	RIO III (UB) (11-17)	1,25 CVVT		09.2011		58305-3XA00 , 58305-C7A00	
		KIA	RIO III (UB) (11-17)	1,2 CVVT		11.2014		58305-3XA00 , 58305-C7A00	
		KIA	RIO III (UB) (11-17)			09.2011		58305-3XA00 , 58305-C7A00	

FSB - Parking brake shoe

03.0137-3050.2	**653050**	TOYOTA	PRIUS PLUS (12-)	1,8 Hybrid (ZVW40)		03.2012		46590-47020 , 46550-47020 , 46540-47020	

HBS - Handbrake cable

24.3727-0679.2	**580679**	FORD	B-MAX (12-)	1,4 Duratec		10.2012	05.2013	AP31-2853-AB , 1751871	
		FORD	B-MAX (12-)	1,0 EcoBoost		06.2013		AP31-2853-AB , 1751871	
		FORD	B-MAX (12-)			10.2012	05.2013	AP31-2853-AB , 1751871	
		FORD	B-MAX (12-)	1,4 Duratec		06.2013		AP31-2853-AB , 1751871	
		FORD	B-MAX (12-)	1,6 Ti-VCT		10.2012	05.2013	AP31-2853-AB , 1751871	
		FORD	B-MAX (12-)			06.2013		AP31-2853-AB , 1751871	
		FORD	B-MAX (12-)	1,6 TDCi		10.2012	05.2013	AP31-2853-AB , 1751871	
		FORD	B-MAX (12-)			06.2013		AP31-2853-AB , 1751871	
		FORD	B-MAX (12-)	1,5 TDCi		10.2012	05.2013	AP31-2853-AB , 1751871	
		FORD	B-MAX (12-)			06.2013		AP31-2853-AB , 1751871	
		FORD	B-MAX (12-)	1,4 LPG		08.2013		AP31-2853-AB , 1751871	
		FORD	B-MAX (12-)	1,0 EcoBoost		02.2016		AP31-2853-AB , 1751871	
		FORD	B-MAX (12-)	1,5 TDCi		04.2015		AP31-2853-AB , 1751871	
		FORD	FIESTA VI (08-)	1,0 Sport EcoBoost		05.2014		AP31-2853-AB , 1751871	
		FORD	FIESTA VI (08-)	1,5 TDCi		10.2012	05.2013	AP31-2853-AB , 1751871	
		FORD	FIESTA VI (08-)	1,6 Ti-VCT		06.2013		AP31-2853-AB , 1751871	
		FORD	FIESTA VI (08-)			10.2012	05.2013	AP31-2853-AB , 1751871	
		FORD	FIESTA VI (08-)	1,5 TDCi		05.2015		AP31-2853-AB , 1751871	
		FORD	FIESTA VI (08-)	1,0 EcoBoost		10.2012	05.2013	AP31-2853-AB , 1751871	
		FORD	FIESTA VI (08-)			06.2013		AP31-2853-AB , 1751871	

					OE numbers per ATE pn.	e.g. replaced pn. / miscellaneous

HBS - Handbrake cable

24.3727-0679.2	**580679**	FORD	FIESTA VI (08-)	1		10.2012	05.2013	AP31-2853-AB , 1751871	
		FORD	FIESTA VI (08-)			06.2013		AP31-2853-AB , 1751871	
		FORD	FIESTA VI (08-)	1,5 TDCi		06.2013		AP31-2853-AB , 1751871	
		FORD	TRANSIT COURIER / TOURNEO COURIER (14-)	1,0 EcoBoost		02.2014		AP31-2853-AB , 1751871	
		FORD	TRANSIT COURIER / TOURNEO COURIER (14-)	1,5 TDCi		02.2014		AP31-2853-AB , 1751871	
		FORD	TRANSIT COURIER / TOURNEO COURIER (14-)			05.2015		AP31-2853-AB , 1751871	
		FORD	TRANSIT COURIER / TOURNEO COURIER (14-)	1,6 TDCi		02.2014		AP31-2853-AB , 1751871	

HBZ - Master cylinder

03.2123-3624.3	**010956**	VOLVO	C30 Coupe (06-12)	1,6 D2		10.2010	12.2012	36001230	
		VOLVO	C30 Coupe (06-12)	2,0 D4		10.2010	12.2012	36001230	
		VOLVO	C30 Coupe (06-12)	2,0 D3		10.2010	12.2012	36001230	
		VOLVO	C70 II Cabrio (06-13)			10.2010	07.2013	36001230	
		VOLVO	C70 II Cabrio (06-13)	2,0 D4		10.2010	07.2013	36001230	
		VOLVO	S40 II (04-12)	2,0 D3		10.2010	05.2012	36001230	
		VOLVO	S40 II (04-12)	2,0 D4		10.2010	05.2012	36001230	
		VOLVO	S40 II (04-12)	1,6 D2		10.2010	05.2012	36001230	
		VOLVO	V50 (04-12)			01.2010	05.2012	36001230	
		VOLVO	V50 (04-12)	2,0 D3		10.2010	05.2012	36001230	

HBZ - Master cylinder

03.2123-3624.3	**010956**	VOLVO	V50 (04-12)	2,0 D4		10.2010	05.2012	36001230	

KSE - Clutch cable

24.3728-3101.2	**593101**	HYUNDAI	i10 (08-13)	1,2 16V		04.2011	11.2013	41510-0X100	
		HYUNDAI	i10 (08-13)	1,0 12V		01.2011	11.2013	41510-0X100	
		HYUNDAI	i10 (08-13)	1,2 12V		11.2008	11.2013	41510-0X100	

RSH - ATE Original TOPKIT rear

03.0520-9820.3	**690108**	CHEVROLET	SPARK (10-)	1,2 LPG		04.2012			
		CHEVROLET	SPARK (10-)	1,2 16V		04.2012			
		CHEVROLET	SPARK (10-)	1		04.2012			
		CHEVROLET	SPARK (10-)	1,0 16V		04.2012			

SAH - Caliper rear

24.3384-1736.5	**240823**	AUDI	A4 (B6/B7) (01-08)	1,8 T	RR	12.2000		8E0 615 424 G , 8E0 615 424 B	24.3384-1736.7
		AUDI	A4 (B6/B7) (01-08)	1,6	RR	12.2000		8E0 615 424 G , 8E0 615 424 B	24.3384-1736.7

New partnumbers on stock - according to ATE pn. 03/2018

SAH - Caliper rear

24.3384-1736.5	**240823**	AUDI	A4 (B6/B7) (01-08)	1,8 T quattro	RR	07.2001		8E0 615 424 G , 8E0 615 424 B	24.3384-1736.7
		AUDI	A4 (B6/B7) (01-08)	1,8 T	RR	11.2002		8E0 615 424 G , 8E0 615 424 B	24.3384-1736.7
		AUDI	A4 (B6/B7) (01-08)		RR	07.2002		8E0 615 424 G , 8E0 615 424 B	24.3384-1736.7
		AUDI	A4 (B6/B7) (01-08)	3,0 TDI quattro	RR	01.2006		8E0 615 424 G , 8E0 615 424 B	24.3384-1736.7
		AUDI	A4 (B6/B7) (01-08)	3,0 quattro	RR	12.2000		8E0 615 424 G , 8E0 615 424 B	24.3384-1736.7
		AUDI	A4 (B6/B7) (01-08)	3	RR	12.2000		8E0 615 424 G , 8E0 615 424 B	24.3384-1736.7
		AUDI	A4 (B6/B7) (01-08)	2,7 TDI	RR	11.2005		8E0 615 424 G , 8E0 615 424 B	24.3384-1736.7
		AUDI	A4 (B6/B7) (01-08)	2,0 TFSI	RR	06.2005		8E0 615 424 G , 8E0 615 424 B	24.3384-1736.7
		AUDI	A4 (B6/B7) (01-08)	1,8 T	RR	07.2001		8E0 615 424 G , 8E0 615 424 B	24.3384-1736.7
		AUDI	A4 (B6/B7) (01-08)	2,0 TDI quattro	RR	06.2006		8E0 615 424 G , 8E0 615 424 B	24.3384-1736.7
		AUDI	A4 (B6/B7) (01-08)		RR	01.2006		8E0 615 424 G , 8E0 615 424 B	24.3384-1736.7
		AUDI	A4 (B6/B7) (01-08)	1,8 T quattro	RR	07.2002		8E0 615 424 G , 8E0 615 424 B	24.3384-1736.7
		AUDI	A4 (B6/B7) (01-08)	2,4	RR	09.2001		8E0 615 424 G , 8E0 615 424 B	24.3384-1736.7

SAH - Caliper rear

24.3384-1736.5	**240823**	AUDI	A4 (B6/B7) (01-08)	2,5 TDI quattro	RR	12.2000		8E0 615 424 G , 8E0 615 424 B	24.3384-1736.7
		AUDI	A4 (B6/B7) (01-08)	2	RR	12.2000		8E0 615 424 G , 8E0 615 424 B	24.3384-1736.7
		AUDI	A4 (B6/B7) (01-08)	1,9 TDI quattro	RR	12.2000		8E0 615 424 G , 8E0 615 424 B	24.3384-1736.7
		AUDI	A4 (B6/B7) (01-08)	3,2 FSI quattro	RR	01.2005		8E0 615 424 G , 8E0 615 424 B	24.3384-1736.7
		AUDI	A4 (B6/B7) (01-08)	1,9 TDI	RR	12.2000		8E0 615 424 G , 8E0 615 424 B	24.3384-1736.7
		AUDI	A4 (B6/B7) (01-08)		RR	06.2004		8E0 615 424 G , 8E0 615 424 B	24.3384-1736.7
		AUDI	A4 (B6/B7) (01-08)		RR	04.2001		8E0 615 424 G , 8E0 615 424 B	24.3384-1736.7
		AUDI	A4 (B6/B7) (01-08)	1,8 T quattro	RR	12.2000		8E0 615 424 G , 8E0 615 424 B	24.3384-1736.7
		AUDI	A4 (B6/B7) (01-08)	2,0 TDI	RR	06.2006		8E0 615 424 G , 8E0 615 424 B	24.3384-1736.7
		AUDI	A4 (B6/B7) (01-08)	1,8 T quattro	RR	11.2002		8E0 615 424 G , 8E0 615 424 B	24.3384-1736.7
		AUDI	A4 (B6/B7) (01-08)	2,0 TFSI quattro	RR	11.2004		8E0 615 424 G , 8E0 615 424 B	24.3384-1736.7
		AUDI	A4 (B6/B7) (01-08)	2,0 TDI	RR	11.2004		8E0 615 424 G , 8E0 615 424 B	24.3384-1736.7
		AUDI	A4 (B6/B7) (01-08)	2,0 TFSI quattro	RR	06.2005		8E0 615 424 G , 8E0 615 424 B	24.3384-1736.7

New partnumbers on stock - according to ATE pn. 03/2018

SAH - Caliper rear

24.3384-1736.5	**240823**	AUDI	A4 (B6/B7) (01-08)	2,0 TFSI	RR	11.2004		8E0 615 424 G , 8E0 615 424 B	24.3384-1736.7
		AUDI	A4 (B6/B7) (01-08)	2,7 TDI	RR	01.2006		8E0 615 424 G , 8E0 615 424 B	24.3384-1736.7
		AUDI	A4 (B6/B7) (01-08)	3,2 FSI	RR	01.2005		8E0 615 424 G , 8E0 615 424 B	24.3384-1736.7
		AUDI	A4 (B6/B7) (01-08)	3,0 TDI quattro	RR	11.2004		8E0 615 424 G , 8E0 615 424 B	24.3384-1736.7
		AUDI	A4 (B6/B7) (01-08)	2,0 FSI	RR	07.2002		8E0 615 424 G , 8E0 615 424 B	24.3384-1736.7
		AUDI	A4 (B6/B7) (01-08)	2,5 TDI	RR	12.2000		8E0 615 424 G , 8E0 615 424 B	24.3384-1736.7
		AUDI	A4 Convertible (02-08)	2,0 TDI	RR	10.2005	11.2008	8E0 615 424 G , 8E0 615 424 B	24.3384-1736.7
		AUDI	A4 Convertible (02-08)	2	RR	05.2004	11.2008	8E0 615 424 G , 8E0 615 424 B	24.3384-1736.7
		AUDI	A4 Convertible (02-08)	2,0 TFSI quattro	RR	11.2005	11.2008	8E0 615 424 G , 8E0 615 424 B	24.3384-1736.7
		AUDI	A4 Convertible (02-08)	1,8 T quattro	RR	05.2003	11.2008	8E0 615 424 G , 8E0 615 424 B	24.3384-1736.7
		AUDI	A4 Convertible (02-08)	3,0 quattro	RR	05.2003	12.2005	8E0 615 424 G , 8E0 615 424 B	24.3384-1736.7
		AUDI	A4 Convertible (02-08)	2,0 TFSI	RR	01.2006	11.2008	8E0 615 424 G , 8E0 615 424 B	24.3384-1736.7
		AUDI	A4 Convertible (02-08)	2,4	RR	04.2002	12.2005	8E0 615 424 G , 8E0 615 424 B	24.3384-1736.7

SAH - Caliper rear

24.3384-1736.5	**240823**	AUDI	A4 Convertible (02-08)	2,5 TDI	RR	08.2002	12.2005	8E0 615 424 G , 8E0 615 424 B	24.3384-1736.7
		AUDI	A4 Convertible (02-08)	3	RR	04.2002	12.2005	8E0 615 424 G , 8E0 615 424 B	24.3384-1736.7
		AUDI	A4 Convertible (02-08)	1,8 T	RR	04.2002	11.2008	8E0 615 424 G , 8E0 615 424 B	24.3384-1736.7
		SEAT	EXEO / ST (09-13)	1,6	RR	04.2009	06.2013	8E0 615 424 G , 8E0 615 424 B	24.3384-1736.7
		SEAT	EXEO / ST (09-13)	1,8 T	RR	04.2009	06.2013	8E0 615 424 G , 8E0 615 424 B	24.3384-1736.7
		SEAT	EXEO / ST (09-13)	1,8 TSI	RR	05.2010	06.2013	8E0 615 424 G , 8E0 615 424 B	24.3384-1736.7
		SEAT	EXEO / ST (09-13)		RR	09.2010	06.2013	8E0 615 424 G , 8E0 615 424 B	24.3384-1736.7
		SEAT	EXEO / ST (09-13)	2,0 TDI	RR	04.2009	06.2013	8E0 615 424 G , 8E0 615 424 B	24.3384-1736.7
		SEAT	EXEO / ST (09-13)	2,0 TFSI	RR	04.2009	06.2013	8E0 615 424 G , 8E0 615 424 B	24.3384-1736.7
24.3301-1704.5	**240861**	MERCEDES BENZ	A-Klasse (W169) (04-12)	A 160 CDI	RR	08.2004	05.2012	A 169 420 16 83 , A 169 420 08 83 , 169 420 16 83 , 169 420 08 83	24.3301-1704.7
		MERCEDES BENZ	A-Klasse (W169) (04-12)	A 170	RR	08.2004	05.2012	A 169 420 16 83 , A 169 420 08 83 , 169 420 16 83 , 169 420 08 83	24.3301-1704.7
		MERCEDES BENZ	A-Klasse (W169) (04-12)	A 200 Turbo	RR	03.2005	05.2012	A 169 420 16 83 , A 169 420 08 83 , 169 420 16 83 , 169 420 08 83	24.3301-1704.7

				OE numbers per ATE pn.	e.g. replaced pn. / miscellaneous

SAH - Caliper rear

24.3301-1704.5	**240861**	MERCEDES BENZ	A-Klasse (W169) (04-12)	A 150 / A 160	RR	08.2004	05.2012	A 169 420 16 83 , A 169 420 08 83 , 169 420 16 83 , 169 420 08 83	24.3301-1704.7
		MERCEDES BENZ	A-Klasse (W169) (04-12)	A 200 CDI	RR	08.2004	05.2012	A 169 420 16 83 , A 169 420 08 83 , 169 420 16 83 , 169 420 08 83	24.3301-1704.7
		MERCEDES BENZ	A-Klasse (W169) (04-12)	A 180	RR	04.2009	05.2012	A 169 420 16 83 , A 169 420 08 83 , 169 420 16 83 , 169 420 08 83	24.3301-1704.7
		MERCEDES BENZ	A-Klasse (W169) (04-12)	A 200	RR	08.2004	05.2012	A 169 420 16 83 , A 169 420 08 83 , 169 420 16 83 , 169 420 08 83	24.3301-1704.7
		MERCEDES BENZ	A-Klasse (W169) (04-12)	A 180 CDI	RR	08.2004	05.2012	A 169 420 16 83 , A 169 420 08 83 , 169 420 16 83 , 169 420 08 83	24.3301-1704.7
		MERCEDES BENZ	B-Klasse (W245) (05-11)	B 160 BlueEfficiency	RR	04.2009	04.2011	A 169 420 16 83 , A 169 420 08 83 , 169 420 16 83 , 169 420 08 83	24.3301-1704.7
		MERCEDES BENZ	B-Klasse (W245) (05-11)	B 200 Turbo	RR	03.2005	04.2011	A 169 420 16 83 , A 169 420 08 83 , 169 420 16 83 , 169 420 08 83	24.3301-1704.7
		MERCEDES BENZ	B-Klasse (W245) (05-11)	B 150 / B 160	RR	03.2005	04.2011	A 169 420 16 83 , A 169 420 08 83 , 169 420 16 83 , 169 420 08 83	24.3301-1704.7
		MERCEDES BENZ	B-Klasse (W245) (05-11)	B 170 / B 180	RR	03.2005	04.2011	A 169 420 16 83 , A 169 420 08 83 , 169 420 16 83 , 169 420 08 83	24.3301-1704.7
		MERCEDES BENZ	B-Klasse (W245) (05-11)	B 170 NGT	RR	04.2008	04.2009	A 169 420 16 83 , A 169 420 08 83 , 169 420 16 83 , 169 420 08 83	24.3301-1704.7

SAH - Caliper rear

24.3301-1704.5	**240861**	MERCEDES BENZ	B-Klasse (W245) (05-11)	B 180 BlueEfficiency	RR	04.2009	04.2011	A 169 420 16 83 , A 169 420 08 83 , 169 420 16 83 , 169 420 08 83	24.3301-1704.7
		MERCEDES BENZ	B-Klasse (W245) (05-11)	B 180 CDI	RR	03.2005	04.2011	A 169 420 16 83 , A 169 420 08 83 , 169 420 16 83 , 169 420 08 83	24.3301-1704.7
		MERCEDES BENZ	B-Klasse (W245) (05-11)	B 180 NGT	RR	04.2009	04.2011	A 169 420 16 83 , A 169 420 08 83 , 169 420 16 83 , 169 420 08 83	24.3301-1704.7
		MERCEDES BENZ	B-Klasse (W245) (05-11)	B 200	RR	03.2005	04.2011	A 169 420 16 83 , A 169 420 08 83 , 169 420 16 83 , 169 420 08 83	24.3301-1704.7
		MERCEDES BENZ	B-Klasse (W245) (05-11)	B 200 CDI	RR	03.2005	04.2011	A 169 420 16 83 , A 169 420 08 83 , 169 420 16 83 , 169 420 08 83	24.3301-1704.7

SAV - Caliper front

24.3606-1713.5	**240892**	AUDI	A6 (4G2/C7) Limousine (11-)	2,0 TFSI	FL	09.2014		4G0 615 123 D , 4G0 615 123 A	
		AUDI	A6 (4G2/C7) Limousine (11-)	2,0 TFSI quattro	FL	05.2013		4G0 615 123 D , 4G0 615 123 A	
		AUDI	A6 (4G2/C7) Limousine (11-)		FL	05.2012		4G0 615 123 D , 4G0 615 123 A	
		AUDI	A6 (4G2/C7) Limousine (11-)	2,0 TFSI hybrid	FL	11.2011		4G0 615 123 D , 4G0 615 123 A	
		AUDI	A6 (4G2/C7) Limousine (11-)	2,0 TFSI quattro	FL	05.2014		4G0 615 123 D , 4G0 615 123 A	

SAV - Caliper front

24.3606-1713.5	**240892**	AUDI	A6 (4G2/C7) Limousine (11-)	2,0 TFSI	FL	05.2013		4G0 615 123 D , 4G0 615 123 A	
		AUDI	A6 (4G2/C7) Limousine (11-)	S6	FL	10.2014		4G0 615 123 D , 4G0 615 123 A	
		AUDI	A6 (4G2/C7) Limousine (11-)	2,0 TDI ultra	FL	11.2013		4G0 615 123 D , 4G0 615 123 A	
		AUDI	A6 (4G2/C7) Limousine (11-)	2,0 TDI	FL	09.2014		4G0 615 123 D , 4G0 615 123 A	
		AUDI	A6 (4G2/C7) Limousine (11-)	2,8 FSI	FL	04.2011		4G0 615 123 D , 4G0 615 123 A	
		AUDI	A6 (4G2/C7) Limousine (11-)	3,0 TDI quattro	FL	12.2011		4G0 615 123 D , 4G0 615 123 A	
		AUDI	A6 (4G2/C7) Limousine (11-)	2,0 TDI	FL	04.2011		4G0 615 123 D , 4G0 615 123 A	
		AUDI	A6 (4G2/C7) Limousine (11-)	2,8 FSI quattro	FL	04.2011		4G0 615 123 D , 4G0 615 123 A	
		AUDI	A6 (4G2/C7) Limousine (11-)		FL	09.2014		4G0 615 123 D , 4G0 615 123 A	
		AUDI	A6 (4G2/C7) Limousine (11-)	3,0 TDI	FL	04.2011		4G0 615 123 D , 4G0 615 123 A	
		AUDI	A6 (4G2/C7) Limousine (11-)		FL	09.2014		4G0 615 123 D , 4G0 615 123 A	
		AUDI	A6 (4G2/C7) Limousine (11-)	3,0 TDI quattro	FL	04.2011		4G0 615 123 D , 4G0 615 123 A	
		AUDI	A6 (4G2/C7) Limousine (11-)	2,0 TDI	FL	01.2012		4G0 615 123 D , 4G0 615 123 A	

SAV - Caliper front

24.3606-1713.5	**240892**	AUDI	A6 (4G2/C7) Limousine (11-)	3,0 TDI quattro	FL	09.2014		4G0 615 123 D , 4G0 615 123 A	
		AUDI	A6 (4G2/C7) Limousine (11-)	2,0 TDI quattro	FL	04.2015		4G0 615 123 D , 4G0 615 123 A	
		AUDI	A6 (4G2/C7) Limousine (11-)	3,0 TFSI quattro	FL	04.2011		4G0 615 123 D , 4G0 615 123 A	
		AUDI	A6 (4G2/C7) Limousine (11-)		FL	09.2014		4G0 615 123 D , 4G0 615 123 A	
		AUDI	A6 (4G2/C7) Limousine (11-)	S6	FL	04.2012		4G0 615 123 D , 4G0 615 123 A	
		AUDI	A6 (4G2/C7) Limousine (11-)	3,0 TDI quattro	FL	05.2013		4G0 615 123 D , 4G0 615 123 A	
		AUDI	A6 (4G2/C7) Limousine (11-)	2,0 TFSI	FL	04.2011		4G0 615 123 D , 4G0 615 123 A	
		AUDI	A6 (4G2/C7) Limousine (11-)	1,8 TFSI	FL	09.2014		4G0 615 123 D , 4G0 615 123 A	
		AUDI	A6 (4G5/C7) Avant (11-)	2,8 FSI quattro	FL	09.2011		4G0 615 123 D , 4G0 615 123 A	
		AUDI	A6 (4G5/C7) Avant (11-)	S6	FL	09.2014		4G0 615 123 D , 4G0 615 123 A	
		AUDI	A6 (4G5/C7) Avant (11-)		FL	04.2012		4G0 615 123 D , 4G0 615 123 A	
		AUDI	A6 (4G5/C7) Avant (11-)	3,0 TFSI quattro	FL	09.2014		4G0 615 123 D , 4G0 615 123 A	
		AUDI	A6 (4G5/C7) Avant (11-)		FL	09.2011		4G0 615 123 D , 4G0 615 123 A	

SAV - Caliper front

24.3606-1713.5	**240892**	AUDI	A6 (4G5/C7) Avant (11-)	3,0 TDI quattro	FL	12.2011		4G0 615 123 D , 4G0 615 123 A	
		AUDI	A6 (4G5/C7) Avant (11-)		FL	09.2014		4G0 615 123 D , 4G0 615 123 A	
		AUDI	A6 (4G5/C7) Avant (11-)		FL	09.2011		4G0 615 123 D , 4G0 615 123 A	
		AUDI	A6 (4G5/C7) Avant (11-)	3,0 TDI	FL	09.2014		4G0 615 123 D , 4G0 615 123 A	
		AUDI	A6 (4G5/C7) Avant (11-)	2,8 FSI quattro	FL	09.2014		4G0 615 123 D , 4G0 615 123 A	
		AUDI	A6 (4G5/C7) Avant (11-)	2,8 FSI	FL	09.2011		4G0 615 123 D , 4G0 615 123 A	
		AUDI	A6 (4G5/C7) Avant (11-)	2,0 TFSI quattro	FL	05.2015		4G0 615 123 D , 4G0 615 123 A	
		AUDI	A6 (4G5/C7) Avant (11-)	2,0 TFSI	FL	09.2014		4G0 615 123 D , 4G0 615 123 A	
		AUDI	A6 (4G5/C7) Avant (11-)		FL	06.2011		4G0 615 123 D , 4G0 615 123 A	
		AUDI	A6 (4G5/C7) Avant (11-)	2,0 TDI ultra	FL	11.2013		4G0 615 123 D , 4G0 615 123 A	
		AUDI	A6 (4G5/C7) Avant (11-)	2,0 TDI quattro	FL	04.2015		4G0 615 123 D , 4G0 615 123 A	
		AUDI	A6 (4G5/C7) Avant (11-)	2,0 TDI	FL	09.2014		4G0 615 123 D , 4G0 615 123 A	
		AUDI	A6 (4G5/C7) Avant (11-)		FL	09.2011		4G0 615 123 D , 4G0 615 123 A	

SAV - Caliper front

24.3606-1713.5	**240892**	AUDI	A6 (4G5/C7) Avant (11-)	2,0 TDI	FL	01.2012		4G0 615 123 D , 4G0 615 123 A	
		AUDI	A6 (4G5/C7) Avant (11-)	1,8 TFSI	FL	09.2014		4G0 615 123 D , 4G0 615 123 A	
		AUDI	A6 (4G5/C7) Avant (11-)	3,0 TDI	FL	09.2011		4G0 615 123 D , 4G0 615 123 A	
		AUDI	A6 Allroad (12-)	3,0 TDI quattro	FL	11.2015		4G0 615 123 D , 4G0 615 123 A	
		AUDI	A6 Allroad (12-)	3,0 TFSI quattro	FL	01.2012		4G0 615 123 D , 4G0 615 123 A	
		AUDI	A6 Allroad (12-)		FL	09.2014		4G0 615 123 D , 4G0 615 123 A	
		AUDI	A6 Allroad (12-)	3,0 TDI quattro	FL	09.2014		4G0 615 123 D , 4G0 615 123 A	
		AUDI	A6 Allroad (12-)		FL	01.2012		4G0 615 123 D , 4G0 615 123 A	
		AUDI	A7 Sportback (10-)		FL	05.2013		4G0 615 123 D , 4G0 615 123 A	
		AUDI	A7 Sportback (10-)	S7	FL	10.2011		4G0 615 123 D , 4G0 615 123 A	
		AUDI	A7 Sportback (10-)		FL	05.2014		4G0 615 123 D , 4G0 615 123 A	
		AUDI	A7 Sportback (10-)	3,0 TFSI quattro	FL	07.2010		4G0 615 123 D , 4G0 615 123 A	
		AUDI	A7 Sportback (10-)		FL	05.2014		4G0 615 123 D , 4G0 615 123 A	

SAV - Caliper front

24.3606-1713.5	**240892**	AUDI	A7 Sportback (10-)	3,0 TDI ultra	FL	05.2014		4G0 615 123 D , 4G0 615 123 A	
		AUDI	A7 Sportback (10-)	3,0 TDI quattro	FL	11.2015		4G0 615 123 D , 4G0 615 123 A	
		AUDI	A7 Sportback (10-)		FL	11.2011		4G0 615 123 D , 4G0 615 123 A	
		AUDI	A7 Sportback (10-)		FL	08.2014		4G0 615 123 D , 4G0 615 123 A	
		AUDI	A7 Sportback (10-)		FL	05.2014		4G0 615 123 D , 4G0 615 123 A	
		AUDI	A7 Sportback (10-)	3,0 TDI	FL	11.2015		4G0 615 123 D , 4G0 615 123 A	
		AUDI	A7 Sportback (10-)		FL	11.2010		4G0 615 123 D , 4G0 615 123 A	
		AUDI	A7 Sportback (10-)	2,8 FSI quattro	FL	09.2014		4G0 615 123 D , 4G0 615 123 A	
		AUDI	A7 Sportback (10-)		FL	07.2010		4G0 615 123 D , 4G0 615 123 A	
		AUDI	A7 Sportback (10-)	2,8 FSI	FL	05.2011		4G0 615 123 D , 4G0 615 123 A	
		AUDI	A7 Sportback (10-)	2,0 TFSI quattro	FL	05.2015		4G0 615 123 D , 4G0 615 123 A	
		AUDI	A7 Sportback (10-)	2,0 TFSI	FL	09.2014		4G0 615 123 D , 4G0 615 123 A	
		AUDI	A7 Sportback (10-)	1,8 TFSI	FL	04.2015		4G0 615 123 D , 4G0 615 123 A	

SAV - Caliper front

24.3606-1713.5	**240892**	AUDI	A7 Sportback (10-)	3,0 TDI quattro	FL	07.2010		4G0 615 123 D , 4G0 615 123 A	
24.3606-1714.5	**240893**	AUDI	A6 (4G2/C7) Limousine (11-)	3,0 TDI	FR	09.2014		4G0 615 124 D , 4G0 615 124 A	
		AUDI	A6 (4G2/C7) Limousine (11-)	2,0 TFSI quattro	FR	05.2014		4G0 615 124 D , 4G0 615 124 A	
		AUDI	A6 (4G2/C7) Limousine (11-)	1,8 TFSI	FR	09.2014		4G0 615 124 D , 4G0 615 124 A	
		AUDI	A6 (4G2/C7) Limousine (11-)	2,0 TDI	FR	01.2012		4G0 615 124 D , 4G0 615 124 A	
		AUDI	A6 (4G2/C7) Limousine (11-)		FR	04.2011		4G0 615 124 D , 4G0 615 124 A	
		AUDI	A6 (4G2/C7) Limousine (11-)		FR	09.2014		4G0 615 124 D , 4G0 615 124 A	
		AUDI	A6 (4G2/C7) Limousine (11-)	2,0 TDI quattro	FR	04.2015		4G0 615 124 D , 4G0 615 124 A	
		AUDI	A6 (4G2/C7) Limousine (11-)	2,0 TDI ultra	FR	11.2013		4G0 615 124 D , 4G0 615 124 A	
		AUDI	A6 (4G2/C7) Limousine (11-)	2,0 TFSI	FR	04.2011		4G0 615 124 D , 4G0 615 124 A	
		AUDI	A6 (4G2/C7) Limousine (11-)		FR	05.2013		4G0 615 124 D , 4G0 615 124 A	
		AUDI	A6 (4G2/C7) Limousine (11-)		FR	09.2014		4G0 615 124 D , 4G0 615 124 A	
		AUDI	A6 (4G2/C7) Limousine (11-)	2,0 TFSI hybrid	FR	11.2011		4G0 615 124 D , 4G0 615 124 A	

								OE numbers per ATE pn.	e.g. replaced pn. / miscellaneous

SAV - Caliper front

24.3606-1714.5	**240893**	AUDI	A6 (4G2/C7) Limousine (11-)	3,0 TDI quattro	FR	05.2013		4G0 615 124 D , 4G0 615 124 A	
		AUDI	A6 (4G2/C7) Limousine (11-)	2,0 TFSI quattro	FR	05.2013		4G0 615 124 D , 4G0 615 124 A	
		AUDI	A6 (4G2/C7) Limousine (11-)	S6	FR	10.2014		4G0 615 124 D , 4G0 615 124 A	
		AUDI	A6 (4G2/C7) Limousine (11-)	2,8 FSI	FR	04.2011		4G0 615 124 D , 4G0 615 124 A	
		AUDI	A6 (4G2/C7) Limousine (11-)	2,8 FSI quattro	FR	04.2011		4G0 615 124 D , 4G0 615 124 A	
		AUDI	A6 (4G2/C7) Limousine (11-)		FR	09.2014		4G0 615 124 D , 4G0 615 124 A	
		AUDI	A6 (4G2/C7) Limousine (11-)	3,0 TDI	FR	04.2011		4G0 615 124 D , 4G0 615 124 A	
		AUDI	A6 (4G2/C7) Limousine (11-)	3,0 TDI quattro	FR	04.2011		4G0 615 124 D , 4G0 615 124 A	
		AUDI	A6 (4G2/C7) Limousine (11-)		FR	09.2014		4G0 615 124 D , 4G0 615 124 A	
		AUDI	A6 (4G2/C7) Limousine (11-)		FR	12.2011		4G0 615 124 D , 4G0 615 124 A	
		AUDI	A6 (4G2/C7) Limousine (11-)	3,0 TFSI quattro	FR	04.2011		4G0 615 124 D , 4G0 615 124 A	
		AUDI	A6 (4G2/C7) Limousine (11-)		FR	09.2014		4G0 615 124 D , 4G0 615 124 A	
		AUDI	A6 (4G2/C7) Limousine (11-)	S6	FR	04.2012		4G0 615 124 D , 4G0 615 124 A	

SAV - Caliper front

24.3606-1714.5	**240893**	AUDI	A6 (4G2/C7) Limousine (11-)	2,0 TFSI quattro	FR	05.2012		4G0 615 124 D , 4G0 615 124 A	
		AUDI	A6 (4G5/C7) Avant (11-)	3,0 TFSI quattro	FR	09.2011		4G0 615 124 D , 4G0 615 124 A	
		AUDI	A6 (4G5/C7) Avant (11-)		FR	09.2014		4G0 615 124 D , 4G0 615 124 A	
		AUDI	A6 (4G5/C7) Avant (11-)	S6	FR	04.2012		4G0 615 124 D , 4G0 615 124 A	
		AUDI	A6 (4G5/C7) Avant (11-)		FR	09.2014		4G0 615 124 D , 4G0 615 124 A	
		AUDI	A6 (4G5/C7) Avant (11-)	3,0 TDI quattro	FR	12.2011		4G0 615 124 D , 4G0 615 124 A	
		AUDI	A6 (4G5/C7) Avant (11-)		FR	09.2014		4G0 615 124 D , 4G0 615 124 A	
		AUDI	A6 (4G5/C7) Avant (11-)		FR	09.2011		4G0 615 124 D , 4G0 615 124 A	
		AUDI	A6 (4G5/C7) Avant (11-)	3,0 TDI	FR	09.2014		4G0 615 124 D , 4G0 615 124 A	
		AUDI	A6 (4G5/C7) Avant (11-)		FR	09.2011		4G0 615 124 D , 4G0 615 124 A	
		AUDI	A6 (4G5/C7) Avant (11-)	2,8 FSI quattro	FR	09.2014		4G0 615 124 D , 4G0 615 124 A	
		AUDI	A6 (4G5/C7) Avant (11-)		FR	09.2011		4G0 615 124 D , 4G0 615 124 A	
		AUDI	A6 (4G5/C7) Avant (11-)	2,0 TFSI quattro	FR	05.2015		4G0 615 124 D , 4G0 615 124 A	

SAV - Caliper front

24.3606-1714.5	**240893**	AUDI	A6 (4G5/C7) Avant (11-)	2,0 TFSI	FR	09.2014		4G0 615 124 D , 4G0 615 124 A	
		AUDI	A6 (4G5/C7) Avant (11-)		FR	06.2011		4G0 615 124 D , 4G0 615 124 A	
		AUDI	A6 (4G5/C7) Avant (11-)	2,0 TDI ultra	FR	11.2013		4G0 615 124 D , 4G0 615 124 A	
		AUDI	A6 (4G5/C7) Avant (11-)	2,0 TDI quattro	FR	04.2015		4G0 615 124 D , 4G0 615 124 A	
		AUDI	A6 (4G5/C7) Avant (11-)	2,0 TDI	FR	09.2014		4G0 615 124 D , 4G0 615 124 A	
		AUDI	A6 (4G5/C7) Avant (11-)		FR	09.2011		4G0 615 124 D , 4G0 615 124 A	
		AUDI	A6 (4G5/C7) Avant (11-)		FR	01.2012		4G0 615 124 D , 4G0 615 124 A	
		AUDI	A6 (4G5/C7) Avant (11-)	1,8 TFSI	FR	09.2014		4G0 615 124 D , 4G0 615 124 A	
		AUDI	A6 (4G5/C7) Avant (11-)	2,8 FSI	FR	09.2011		4G0 615 124 D , 4G0 615 124 A	
		AUDI	A6 Allroad (12-)	3,0 TFSI quattro	FR	01.2012		4G0 615 124 D , 4G0 615 124 A	
		AUDI	A6 Allroad (12-)	3,0 TDI quattro	FR	01.2012		4G0 615 124 D , 4G0 615 124 A	
		AUDI	A6 Allroad (12-)	3,0 TFSI quattro	FR	09.2014		4G0 615 124 D , 4G0 615 124 A	
		AUDI	A6 Allroad (12-)	3,0 TDI quattro	FR	11.2015		4G0 615 124 D , 4G0 615 124 A	

SAV - Caliper front

24.3606-1714.5	**240893**	AUDI	A6 Allroad (12-)	3,0 TDI quattro	FR	09.2014		4G0 615 124 D , 4G0 615 124 A	
		AUDI	A7 Sportback (10-)	2,0 TFSI	FR	09.2014		4G0 615 124 D , 4G0 615 124 A	
		AUDI	A7 Sportback (10-)	S7	FR	05.2014		4G0 615 124 D , 4G0 615 124 A	
		AUDI	A7 Sportback (10-)	3,0 TFSI quattro	FR	07.2010		4G0 615 124 D , 4G0 615 124 A	
		AUDI	A7 Sportback (10-)		FR	05.2014		4G0 615 124 D , 4G0 615 124 A	
		AUDI	A7 Sportback (10-)	3,0 TDI ultra	FR	05.2014		4G0 615 124 D , 4G0 615 124 A	
		AUDI	A7 Sportback (10-)	3,0 TDI quattro	FR	11.2015		4G0 615 124 D , 4G0 615 124 A	
		AUDI	A7 Sportback (10-)		FR	11.2011		4G0 615 124 D , 4G0 615 124 A	
		AUDI	A7 Sportback (10-)		FR	08.2014		4G0 615 124 D , 4G0 615 124 A	
		AUDI	A7 Sportback (10-)		FR	07.2010		4G0 615 124 D , 4G0 615 124 A	
		AUDI	A7 Sportback (10-)		FR	05.2014		4G0 615 124 D , 4G0 615 124 A	
		AUDI	A7 Sportback (10-)		FR	05.2013		4G0 615 124 D , 4G0 615 124 A	
		AUDI	A7 Sportback (10-)	3,0 TDI	FR	11.2015		4G0 615 124 D , 4G0 615 124 A	

SAV - Caliper front

24.3606-1714.5	**240893**	AUDI	A7 Sportback (10-)	S7	FR	10.2011		4G0 615 124 D , 4G0 615 124 A	
		AUDI	A7 Sportback (10-)	2,8 FSI quattro	FR	09.2014		4G0 615 124 D , 4G0 615 124 A	
		AUDI	A7 Sportback (10-)	1,8 TFSI	FR	04.2015		4G0 615 124 D , 4G0 615 124 A	
		AUDI	A7 Sportback (10-)	2,0 TFSI quattro	FR	05.2015		4G0 615 124 D , 4G0 615 124 A	
		AUDI	A7 Sportback (10-)	2,8 FSI	FR	05.2011		4G0 615 124 D , 4G0 615 124 A	
		AUDI	A7 Sportback (10-)	2,8 FSI quattro	FR	07.2010		4G0 615 124 D , 4G0 615 124 A	
		AUDI	A7 Sportback (10-)	3,0 TDI	FR	11.2010		4G0 615 124 D , 4G0 615 124 A	

SBH - Brake pads rear

13.0460-5650.2	**605650**	HYUNDAI	ACCENT IV (10-)	1,4 16V		11.2010		58302-D4A65 , 58302-D4A55 , 58302-D7A70 , 58302-D3A70 , 58302-B2A10 , 58302-A4B60 , 58302-A4B10 , 58302-A6A20 , 58302-1WA35 , 58302-B4A30 , 58302-A6A31 , 58302-C8A30 , 58302-A6A30 , 58302-3XA30 , 58302-1RA30 , 58302-2VA50 , 58302-3ZA70	see drawing

SBH - Brake pads rear

13.0460-5650.2	**605650**	HYUNDAI	ACCENT IV (10-)	1,6 CRDi		10.2011		58302-D4A65 , 58302-D4A55 , 58302-D7A70 , 58302-D3A70 , 58302-B2A10 , 58302-A4B60 , 58302-A4B10 , 58302-A6A20 , 58302-1WA35 , 58302-B4A30 , 58302-A6A31 , 58302-C8A30 , 58302-A6A30 , 58302-3XA30 , 58302-1RA30 , 58302-2VA50 , 58302-3ZA70	see drawing
		HYUNDAI	ACCENT IV (10-)	1,4 CRDi		11.2010		58302-D4A65 , 58302-D4A55 , 58302-D7A70 , 58302-D3A70 , 58302-B2A10 , 58302-A4B60 , 58302-A4B10 , 58302-A6A20 , 58302-1WA35 , 58302-B4A30 , 58302-A6A31 , 58302-C8A30 , 58302-A6A30 , 58302-3XA30 , 58302-1RA30 , 58302-2VA50 , 58302-3ZA70	see drawing
		HYUNDAI	ACCENT IV (10-)	1,6 16V		11.2010		58302-D4A65 , 58302-D4A55 , 58302-D7A70 , 58302-D3A70 , 58302-B2A10 , 58302-A4B60 , 58302-A4B10 , 58302-A6A20 , 58302-1WA35 , 58302-B4A30 , 58302-A6A31 , 58302-C8A30 , 58302-A6A30 , 58302-3XA30 , 58302-1RA30 , 58302-2VA50 , 58302-3ZA70	see drawing
		HYUNDAI	ACCENT IV (10-)	1,6 CCVT-I		11.2010		58302-D4A65 , 58302-D4A55 , 58302-D7A70 , 58302-D3A70 , 58302-B2A10 , 58302-A4B60 , 58302-A4B10 , 58302-A6A20 , 58302-1WA35 , 58302-B4A30 , 58302-A6A31 , 58302-C8A30 , 58302-A6A30 , 58302-3XA30 , 58302-1RA30 , 58302-2VA50 , 58302-3ZA70	see drawing

SBH - Brake pads rear

13.0460-5650.2	**605650**	HYUNDAI	ACCENT IV (10-)	1,6 CRDI		04.2011		58302-D4A65 , 58302-D4A55 , 58302-D7A70 , 58302-D3A70 , 58302-B2A10 , 58302-A4B60 , 58302-A4B10 , 58302-A6A20 , 58302-1WA35 , 58302-B4A30 , 58302-A6A31 , 58302-C8A30 , 58302-A6A30 , 58302-3XA30 , 58302-1RA30 , 58302-2VA50 , 58302-3ZA70	see drawing
		KIA	CARENS IV (13-)	2,0 GDi		03.2013		58302-D4A65 , 58302-D4A55 , 58302-D7A70 , 58302-D3A70 , 58302-B2A10 , 58302-A4B60 , 58302-A4B10 , 58302-A6A20 , 58302-1WA35 , 58302-B4A30 , 58302-A6A31 , 58302-C8A30 , 58302-A6A30 , 58302-3XA30 , 58302-1RA30 , 58302-2VA50 , 58302-3ZA70	see drawing
		KIA	CARENS IV (13-)	1,6 GDi		03.2013		58302-D4A65 , 58302-D4A55 , 58302-D7A70 , 58302-D3A70 , 58302-B2A10 , 58302-A4B60 , 58302-A4B10 , 58302-A6A20 , 58302-1WA35 , 58302-B4A30 , 58302-A6A31 , 58302-C8A30 , 58302-A6A30 , 58302-3XA30 , 58302-1RA30 , 58302-2VA50 , 58302-3ZA70	see drawing
		KIA	CARENS IV (13-)	1,7 CRDi		03.2013		58302-D4A65 , 58302-D4A55 , 58302-D7A70 , 58302-D3A70 , 58302-B2A10 , 58302-A4B60 , 58302-A4B10 , 58302-A6A20 , 58302-1WA35 , 58302-B4A30 , 58302-A6A31 , 58302-C8A30 , 58302-A6A30 , 58302-3XA30 , 58302-1RA30 , 58302-2VA50 , 58302-3ZA70	see drawing

								OE numbers per ATE pn.	e.g. replaced pn. / miscellaneous

SBH - Brake pads rear

13.0460-5650.2	**605650**	KIA	CARENS IV (13-)	1,7 CRDi		07.2015		58302-D4A65 , 58302-D4A55 , 58302-D7A70 , 58302-D3A70 , 58302-B2A10 , 58302-A4B60 , 58302-A4B10 , 58302-A6A20 , 58302-1WA35 , 58302-B4A30 , 58302-A6A31 , 58302-C8A30 , 58302-A6A30 , 58302-3XA30 , 58302-1RA30 , 58302-2VA50 , 58302-3ZA70	see drawing
		KIA	CEE'D (12-)	1,6 CVVT		01.2013		58302-D4A65 , 58302-D4A55 , 58302-D7A70 , 58302-D3A70 , 58302-B2A10 , 58302-A4B60 , 58302-A4B10 , 58302-A6A20 , 58302-1WA35 , 58302-B4A30 , 58302-A6A31 , 58302-C8A30 , 58302-A6A30 , 58302-3XA30 , 58302-1RA30 , 58302-2VA50 , 58302-3ZA70	see drawing
		KIA	CEE'D (12-)	1,0 T-GDI		07.2015		58302-D4A65 , 58302-D4A55 , 58302-D7A70 , 58302-D3A70 , 58302-B2A10 , 58302-A4B60 , 58302-A4B10 , 58302-A6A20 , 58302-1WA35 , 58302-B4A30 , 58302-A6A31 , 58302-C8A30 , 58302-A6A30 , 58302-3XA30 , 58302-1RA30 , 58302-2VA50 , 58302-3ZA70	see drawing
		KIA	CEE'D (12-)	1,6 GT		07.2013		58302-D4A65 , 58302-D4A55 , 58302-D7A70 , 58302-D3A70 , 58302-B2A10 , 58302-A4B60 , 58302-A4B10 , 58302-A6A20 , 58302-1WA35 , 58302-B4A30 , 58302-A6A31 , 58302-C8A30 , 58302-A6A30 , 58302-3XA30 , 58302-1RA30 , 58302-2VA50 , 58302-3ZA70	see drawing

								OE numbers per ATE pn.	e.g. replaced pn. / miscellaneous

SBH - Brake pads rear

13.0460-5650.2	**605650**	KIA	CEE'D (12-)	1,6 CVVT		05.2012		58302-D4A65 , 58302-D4A55 , 58302-D7A70 , 58302-D3A70 , 58302-B2A10 , 58302-A4B60 , 58302-A4B10 , 58302-A6A20 , 58302-1WA35 , 58302-B4A30 , 58302-A6A31 , 58302-C8A30 , 58302-A6A30 , 58302-3XA30 , 58302-1RA30 , 58302-2VA50 , 58302-3ZA70	see drawing
		KIA	CEE'D (12-)	1,6 CRDi 90		05.2012		58302-D4A65 , 58302-D4A55 , 58302-D7A70 , 58302-D3A70 , 58302-B2A10 , 58302-A4B60 , 58302-A4B10 , 58302-A6A20 , 58302-1WA35 , 58302-B4A30 , 58302-A6A31 , 58302-C8A30 , 58302-A6A30 , 58302-3XA30 , 58302-1RA30 , 58302-2VA50 , 58302-3ZA70	see drawing
		KIA	CEE'D (12-)	1,6 CRDI 136		07.2015		58302-D4A65 , 58302-D4A55 , 58302-D7A70 , 58302-D3A70 , 58302-B2A10 , 58302-A4B60 , 58302-A4B10 , 58302-A6A20 , 58302-1WA35 , 58302-B4A30 , 58302-A6A31 , 58302-C8A30 , 58302-A6A30 , 58302-3XA30 , 58302-1RA30 , 58302-2VA50 , 58302-3ZA70	see drawing
		KIA	CEE'D (12-)	1,6 CRDi 128		05.2012		58302-D4A65 , 58302-D4A55 , 58302-D7A70 , 58302-D3A70 , 58302-B2A10 , 58302-A4B60 , 58302-A4B10 , 58302-A6A20 , 58302-1WA35 , 58302-B4A30 , 58302-A6A31 , 58302-C8A30 , 58302-A6A30 , 58302-3XA30 , 58302-1RA30 , 58302-2VA50 , 58302-3ZA70	see drawing

								OE numbers per ATE pn.	e.g. replaced pn. / miscellaneous

SBH - Brake pads rear

13.0460-5650.2	**605650**	KIA	CEE'D (12-)	1,6 CRDi 110		05.2012		58302-D4A65 , 58302-D4A55 , 58302-D7A70 , 58302-D3A70 , 58302-B2A10 , 58302-A4B60 , 58302-A4B10 , 58302-A6A20 , 58302-1WA35 , 58302-B4A30 , 58302-A6A31 , 58302-C8A30 , 58302-A6A30 , 58302-3XA30 , 58302-1RA30 , 58302-2VA50 , 58302-3ZA70	see drawing
		KIA	CEE'D (12-)	1,4 MPI		04.2015		58302-D4A65 , 58302-D4A55 , 58302-D7A70 , 58302-D3A70 , 58302-B2A10 , 58302-A4B60 , 58302-A4B10 , 58302-A6A20 , 58302-1WA35 , 58302-B4A30 , 58302-A6A31 , 58302-C8A30 , 58302-A6A30 , 58302-3XA30 , 58302-1RA30 , 58302-2VA50 , 58302-3ZA70	see drawing
		KIA	CEE'D (12-)	1,4 CRDi 90		05.2012		58302-D4A65 , 58302-D4A55 , 58302-D7A70 , 58302-D3A70 , 58302-B2A10 , 58302-A4B60 , 58302-A4B10 , 58302-A6A20 , 58302-1WA35 , 58302-B4A30 , 58302-A6A31 , 58302-C8A30 , 58302-A6A30 , 58302-3XA30 , 58302-1RA30 , 58302-2VA50 , 58302-3ZA70	see drawing
		KIA	CEE'D (12-)	1,4 CVVT		05.2012		58302-D4A65 , 58302-D4A55 , 58302-D7A70 , 58302-D3A70 , 58302-B2A10 , 58302-A4B60 , 58302-A4B10 , 58302-A6A20 , 58302-1WA35 , 58302-B4A30 , 58302-A6A31 , 58302-C8A30 , 58302-A6A30 , 58302-3XA30 , 58302-1RA30 , 58302-2VA50 , 58302-3ZA70	see drawing

SBH - Brake pads rear

13.0460-5650.2	**605650**	KIA	CEE'D (12-)	1,6 GDI		05.2012		58302-D4A65 , 58302-D4A55 , 58302-D7A70 , 58302-D3A70 , 58302-B2A10 , 58302-A4B60 , 58302-A4B10 , 58302-A6A20 , 58302-1WA35 , 58302-B4A30 , 58302-A6A31 , 58302-C8A30 , 58302-A6A30 , 58302-3XA30 , 58302-1RA30 , 58302-2VA50 , 58302-3ZA70	see drawing
		KIA	CEE'D (12-)	1,6 CRDi 115		05.2012		58302-D4A65 , 58302-D4A55 , 58302-D7A70 , 58302-D3A70 , 58302-B2A10 , 58302-A4B60 , 58302-A4B10 , 58302-A6A20 , 58302-1WA35 , 58302-B4A30 , 58302-A6A31 , 58302-C8A30 , 58302-A6A30 , 58302-3XA30 , 58302-1RA30 , 58302-2VA50 , 58302-3ZA70	see drawing
		HYUNDAI	ELANTRA (MD/UD) (11-15)	1,8 16V		02.2011	12.2015	58302-D4A65 , 58302-D4A55 , 58302-D7A70 , 58302-D3A70 , 58302-B2A10 , 58302-A4B60 , 58302-A4B10 , 58302-A6A20 , 58302-1WA35 , 58302-B4A30 , 58302-A6A31 , 58302-C8A30 , 58302-A6A30 , 58302-3XA30 , 58302-1RA30 , 58302-2VA50 , 58302-3ZA70	see drawing
		HYUNDAI	ELANTRA (MD/UD) (11-15)	1,6 CRDi		02.2011	12.2015	58302-D4A65 , 58302-D4A55 , 58302-D7A70 , 58302-D3A70 , 58302-B2A10 , 58302-A4B60 , 58302-A4B10 , 58302-A6A20 , 58302-1WA35 , 58302-B4A30 , 58302-A6A31 , 58302-C8A30 , 58302-A6A30 , 58302-3XA30 , 58302-1RA30 , 58302-2VA50 , 58302-3ZA70	see drawing

SBH - Brake pads rear

13.0460-5650.2	**605650**	HYUNDAI	ELANTRA (MD/UD) (11-15)	1,6 16V		06.2011	08.2015	58302-D4A65 , 58302-D4A55 , 58302-D7A70 , 58302-D3A70 , 58302-B2A10 , 58302-A4B60 , 58302-A4B10 , 58302-A6A20 , 58302-1WA35 , 58302-B4A30 , 58302-A6A31 , 58302-C8A30 , 58302-A6A30 , 58302-3XA30 , 58302-1RA30 , 58302-2VA50 , 58302-3ZA70	see drawing
		HYUNDAI	ELANTRA (MD/UD) (11-15)	1,8 16V Flex		02.2011	12.2015	58302-D4A65 , 58302-D4A55 , 58302-D7A70 , 58302-D3A70 , 58302-B2A10 , 58302-A4B60 , 58302-A4B10 , 58302-A6A20 , 58302-1WA35 , 58302-B4A30 , 58302-A6A31 , 58302-C8A30 , 58302-A6A30 , 58302-3XA30 , 58302-1RA30 , 58302-2VA50 , 58302-3ZA70	see drawing
		HYUNDAI	i10 (13-)	1,0 12V		12.2013		58302-D4A65 , 58302-D4A55 , 58302-D7A70 , 58302-D3A70 , 58302-B2A10 , 58302-A4B60 , 58302-A4B10 , 58302-A6A20 , 58302-1WA35 , 58302-B4A30 , 58302-A6A31 , 58302-C8A30 , 58302-A6A30 , 58302-3XA30 , 58302-1RA30 , 58302-2VA50 , 58302-3ZA70	see drawing
		HYUNDAI	i10 (13-)	1,0 12V LPG		02.2014		58302-D4A65 , 58302-D4A55 , 58302-D7A70 , 58302-D3A70 , 58302-B2A10 , 58302-A4B60 , 58302-A4B10 , 58302-A6A20 , 58302-1WA35 , 58302-B4A30 , 58302-A6A31 , 58302-C8A30 , 58302-A6A30 , 58302-3XA30 , 58302-1RA30 , 58302-2VA50 , 58302-3ZA70	see drawing

								OE numbers per ATE pn.	e.g. replaced pn. / miscellaneous

SBH - Brake pads rear

13.0460-5650.2	**605650**	HYUNDAI	i10 (13-)	1,2 16V		12.2013		58302-D4A65 , 58302-D4A55 , 58302-D7A70 , 58302-D3A70 , 58302-B2A10 , 58302-A4B60 , 58302-A4B10 , 58302-A6A20 , 58302-1WA35 , 58302-B4A30 , 58302-A6A31 , 58302-C8A30 , 58302-A6A30 , 58302-3XA30 , 58302-1RA30 , 58302-2VA50 , 58302-3ZA70	see drawing
		HYUNDAI	i20 / i20 COUPE (GB) (14-)	1,2 LPGI		11.2014		58302-D4A65 , 58302-D4A55 , 58302-D7A70 , 58302-D3A70 , 58302-B2A10 , 58302-A4B60 , 58302-A4B10 , 58302-A6A20 , 58302-1WA35 , 58302-B4A30 , 58302-A6A31 , 58302-C8A30 , 58302-A6A30 , 58302-3XA30 , 58302-1RA30 , 58302-2VA50 , 58302-3ZA70	see drawing
		HYUNDAI	i20 / i20 COUPE (GB) (14-)	1,4		12.2014		58302-D4A65 , 58302-D4A55 , 58302-D7A70 , 58302-D3A70 , 58302-B2A10 , 58302-A4B60 , 58302-A4B10 , 58302-A6A20 , 58302-1WA35 , 58302-B4A30 , 58302-A6A31 , 58302-C8A30 , 58302-A6A30 , 58302-3XA30 , 58302-1RA30 , 58302-2VA50 , 58302-3ZA70	see drawing
		HYUNDAI	i20 / i20 COUPE (GB) (14-)	1,4 CRDi		12.2014		58302-D4A65 , 58302-D4A55 , 58302-D7A70 , 58302-D3A70 , 58302-B2A10 , 58302-A4B60 , 58302-A4B10 , 58302-A6A20 , 58302-1WA35 , 58302-B4A30 , 58302-A6A31 , 58302-C8A30 , 58302-A6A30 , 58302-3XA30 , 58302-1RA30 , 58302-2VA50 , 58302-3ZA70	see drawing

					OE numbers per ATE pn.	e.g. replaced pn. / miscellaneous

SBH - Brake pads rear

13.0460-5650.2	**605650**	HYUNDAI	i20 / i20 COUPE (GB) (14-)	1,1 CRDi		12.2014		58302-D4A65 , 58302-D4A55 , 58302-D7A70 , 58302-D3A70 , 58302-B2A10 , 58302-A4B60 , 58302-A4B10 , 58302-A6A20 , 58302-1WA35 , 58302-B4A30 , 58302-A6A31 , 58302-C8A30 , 58302-A6A30 , 58302-3XA30 , 58302-1RA30 , 58302-2VA50 , 58302-3ZA70	see drawing
		HYUNDAI	i20 / i20 COUPE (GB) (14-)	1,1 blue CRDi		12.2014		58302-D4A65 , 58302-D4A55 , 58302-D7A70 , 58302-D3A70 , 58302-B2A10 , 58302-A4B60 , 58302-A4B10 , 58302-A6A20 , 58302-1WA35 , 58302-B4A30 , 58302-A6A31 , 58302-C8A30 , 58302-A6A30 , 58302-3XA30 , 58302-1RA30 , 58302-2VA50 , 58302-3ZA70	see drawing
		HYUNDAI	i20 / i20 COUPE (GB) (14-)	1,0 T-GDI		01.2016		58302-D4A65 , 58302-D4A55 , 58302-D7A70 , 58302-D3A70 , 58302-B2A10 , 58302-A4B60 , 58302-A4B10 , 58302-A6A20 , 58302-1WA35 , 58302-B4A30 , 58302-A6A31 , 58302-C8A30 , 58302-A6A30 , 58302-3XA30 , 58302-1RA30 , 58302-2VA50 , 58302-3ZA70	see drawing
		HYUNDAI	i20 / i20 COUPE (GB) (14-)	1,2		12.2014		58302-D4A65 , 58302-D4A55 , 58302-D7A70 , 58302-D3A70 , 58302-B2A10 , 58302-A4B60 , 58302-A4B10 , 58302-A6A20 , 58302-1WA35 , 58302-B4A30 , 58302-A6A31 , 58302-C8A30 , 58302-A6A30 , 58302-3XA30 , 58302-1RA30 , 58302-2VA50 , 58302-3ZA70	see drawing

								OE numbers per ATE pn.	e.g. replaced pn. / miscellaneous

SBH - Brake pads rear

13.0460-5650.2	**605650**	HYUNDAI	i20 ACTIVE (GB) (15-)	1,0 T-GDI		09.2015		58302-D4A65 , 58302-D4A55 , 58302-D7A70 , 58302-D3A70 , 58302-B2A10 , 58302-A4B60 , 58302-A4B10 , 58302-A6A20 , 58302-1WA35 , 58302-B4A30 , 58302-A6A31 , 58302-C8A30 , 58302-A6A30 , 58302-3XA30 , 58302-1RA30 , 58302-2VA50 , 58302-3ZA70	see drawing
		HYUNDAI	i20 ACTIVE (GB) (15-)	1,4		09.2015		58302-D4A65 , 58302-D4A55 , 58302-D7A70 , 58302-D3A70 , 58302-B2A10 , 58302-A4B60 , 58302-A4B10 , 58302-A6A20 , 58302-1WA35 , 58302-B4A30 , 58302-A6A31 , 58302-C8A30 , 58302-A6A30 , 58302-3XA30 , 58302-1RA30 , 58302-2VA50 , 58302-3ZA70	see drawing
		HYUNDAI	i20 ACTIVE (GB) (15-)	1,4 CRDI				58302-D4A65 , 58302-D4A55 , 58302-D7A70 , 58302-D3A70 , 58302-B2A10 , 58302-A4B60 , 58302-A4B10 , 58302-A6A20 , 58302-1WA35 , 58302-B4A30 , 58302-A6A31 , 58302-C8A30 , 58302-A6A30 , 58302-3XA30 , 58302-1RA30 , 58302-2VA50 , 58302-3ZA70	see drawing
		HYUNDAI	i30 (GD) (11-17)	1,4 16V		12.2014		58302-D4A65 , 58302-D4A55 , 58302-D7A70 , 58302-D3A70 , 58302-B2A10 , 58302-A4B60 , 58302-A4B10 , 58302-A6A20 , 58302-1WA35 , 58302-B4A30 , 58302-A6A31 , 58302-C8A30 , 58302-A6A30 , 58302-3XA30 , 58302-1RA30 , 58302-2VA50 , 58302-3ZA70	see drawing

SBH - Brake pads rear

13.0460-5650.2	**605650**	HYUNDAI	i30 (GD) (11-17)	1,6 T-GDI		01.2015		58302-D4A65 , 58302-D4A55 , 58302-D7A70 , 58302-D3A70 , 58302-B2A10 , 58302-A4B60 , 58302-A4B10 , 58302-A6A20 , 58302-1WA35 , 58302-B4A30 , 58302-A6A31 , 58302-C8A30 , 58302-A6A30 , 58302-3XA30 , 58302-1RA30 , 58302-2VA50 , 58302-3ZA70	see drawing
		HYUNDAI	i30 (GD) (11-17)	1,6 GDI		11.2011		58302-D4A65 , 58302-D4A55 , 58302-D7A70 , 58302-D3A70 , 58302-B2A10 , 58302-A4B60 , 58302-A4B10 , 58302-A6A20 , 58302-1WA35 , 58302-B4A30 , 58302-A6A31 , 58302-C8A30 , 58302-A6A30 , 58302-3XA30 , 58302-1RA30 , 58302-2VA50 , 58302-3ZA70	see drawing
		HYUNDAI	i30 (GD) (11-17)	1,6 CRDi		11.2011		58302-D4A65 , 58302-D4A55 , 58302-D7A70 , 58302-D3A70 , 58302-B2A10 , 58302-A4B60 , 58302-A4B10 , 58302-A6A20 , 58302-1WA35 , 58302-B4A30 , 58302-A6A31 , 58302-C8A30 , 58302-A6A30 , 58302-3XA30 , 58302-1RA30 , 58302-2VA50 , 58302-3ZA70	see drawing
		HYUNDAI	i30 (GD) (11-17)	1,6 16V		01.2012		58302-D4A65 , 58302-D4A55 , 58302-D7A70 , 58302-D3A70 , 58302-B2A10 , 58302-A4B60 , 58302-A4B10 , 58302-A6A20 , 58302-1WA35 , 58302-B4A30 , 58302-A6A31 , 58302-C8A30 , 58302-A6A30 , 58302-3XA30 , 58302-1RA30 , 58302-2VA50 , 58302-3ZA70	see drawing

								OE numbers per ATE pn.	e.g. replaced pn. / miscellaneous

SBH - Brake pads rear

13.0460-5650.2	**605650**	HYUNDAI	i30 (GD) (11-17)	1,4 16V		11.2011		58302-D4A65 , 58302-D4A55 , 58302-D7A70 , 58302-D3A70 , 58302-B2A10 , 58302-A4B60 , 58302-A4B10 , 58302-A6A20 , 58302-1WA35 , 58302-B4A30 , 58302-A6A31 , 58302-C8A30 , 58302-A6A30 , 58302-3XA30 , 58302-1RA30 , 58302-2VA50 , 58302-3ZA70	see drawing
		HYUNDAI	i30 (GD) (11-17)	1,6		12.2014		58302-D4A65 , 58302-D4A55 , 58302-D7A70 , 58302-D3A70 , 58302-B2A10 , 58302-A4B60 , 58302-A4B10 , 58302-A6A20 , 58302-1WA35 , 58302-B4A30 , 58302-A6A31 , 58302-C8A30 , 58302-A6A30 , 58302-3XA30 , 58302-1RA30 , 58302-2VA50 , 58302-3ZA70	see drawing
		HYUNDAI	i30 (GD) (11-17)	1,4 CRDi		11.2011		58302-D4A65 , 58302-D4A55 , 58302-D7A70 , 58302-D3A70 , 58302-B2A10 , 58302-A4B60 , 58302-A4B10 , 58302-A6A20 , 58302-1WA35 , 58302-B4A30 , 58302-A6A31 , 58302-C8A30 , 58302-A6A30 , 58302-3XA30 , 58302-1RA30 , 58302-2VA50 , 58302-3ZA70	see drawing
		HYUNDAI	i30 (GD) (11-17)	1,6 CRDi		06.2012		58302-D4A65 , 58302-D4A55 , 58302-D7A70 , 58302-D3A70 , 58302-B2A10 , 58302-A4B60 , 58302-A4B10 , 58302-A6A20 , 58302-1WA35 , 58302-B4A30 , 58302-A6A31 , 58302-C8A30 , 58302-A6A30 , 58302-3XA30 , 58302-1RA30 , 58302-2VA50 , 58302-3ZA70	see drawing

								OE numbers per ATE pn.	e.g. replaced pn. / miscellaneous

SBH - Brake pads rear

13.0460-5650.2	**605650**	HYUNDAI	i30 COUPE (13-)	1,6 MPi		11.2016		58302-D4A65 , 58302-D4A55 , 58302-D7A70 , 58302-D3A70 , 58302-B2A10 , 58302-A4B60 , 58302-A4B10 , 58302-A6A20 , 58302-1WA35 , 58302-B4A30 , 58302-A6A31 , 58302-C8A30 , 58302-A6A30 , 58302-3XA30 , 58302-1RA30 , 58302-2VA50 , 58302-3ZA70	see drawing
		HYUNDAI	i30 COUPE (13-)	1,4 CRDi		05.2013		58302-D4A65 , 58302-D4A55 , 58302-D7A70 , 58302-D3A70 , 58302-B2A10 , 58302-A4B60 , 58302-A4B10 , 58302-A6A20 , 58302-1WA35 , 58302-B4A30 , 58302-A6A31 , 58302-C8A30 , 58302-A6A30 , 58302-3XA30 , 58302-1RA30 , 58302-2VA50 , 58302-3ZA70	see drawing
		HYUNDAI	i30 COUPE (13-)	1,6 CRDi		05.2013		58302-D4A65 , 58302-D4A55 , 58302-D7A70 , 58302-D3A70 , 58302-B2A10 , 58302-A4B60 , 58302-A4B10 , 58302-A6A20 , 58302-1WA35 , 58302-B4A30 , 58302-A6A31 , 58302-C8A30 , 58302-A6A30 , 58302-3XA30 , 58302-1RA30 , 58302-2VA50 , 58302-3ZA70	see drawing
		HYUNDAI	i30 CW Kombi (12-)	1,6 GDI		06.2012		58302-D4A65 , 58302-D4A55 , 58302-D7A70 , 58302-D3A70 , 58302-B2A10 , 58302-A4B60 , 58302-A4B10 , 58302-A6A20 , 58302-1WA35 , 58302-B4A30 , 58302-A6A31 , 58302-C8A30 , 58302-A6A30 , 58302-3XA30 , 58302-1RA30 , 58302-2VA50 , 58302-3ZA70	see drawing

								OE numbers per ATE pn.	e.g. replaced pn. / miscellaneous
13.0460-5650.2	**605650**	HYUNDAI	i30 CW Kombi (12-)	1,4		06.2012		58302-D4A65 , 58302-D4A55 , 58302-D7A70 , 58302-D3A70 , 58302-B2A10 , 58302-A4B60 , 58302-A4B10 , 58302-A6A20 , 58302-1WA35 , 58302-B4A30 , 58302-A6A31 , 58302-C8A30 , 58302-A6A30 , 58302-3XA30 , 58302-1RA30 , 58302-2VA50 , 58302-3ZA70	see drawing
		HYUNDAI	i30 CW Kombi (12-)	1,4 16V		06.2012		58302-D4A65 , 58302-D4A55 , 58302-D7A70 , 58302-D3A70 , 58302-B2A10 , 58302-A4B60 , 58302-A4B10 , 58302-A6A20 , 58302-1WA35 , 58302-B4A30 , 58302-A6A31 , 58302-C8A30 , 58302-A6A30 , 58302-3XA30 , 58302-1RA30 , 58302-2VA50 , 58302-3ZA70	see drawing
		HYUNDAI	i30 CW Kombi (12-)	1,4 CRDi		06.2012		58302-D4A65 , 58302-D4A55 , 58302-D7A70 , 58302-D3A70 , 58302-B2A10 , 58302-A4B60 , 58302-A4B10 , 58302-A6A20 , 58302-1WA35 , 58302-B4A30 , 58302-A6A31 , 58302-C8A30 , 58302-A6A30 , 58302-3XA30 , 58302-1RA30 , 58302-2VA50 , 58302-3ZA70	see drawing
		HYUNDAI	i30 CW Kombi (12-)	1,6 CRDi		06.2012		58302-D4A65 , 58302-D4A55 , 58302-D7A70 , 58302-D3A70 , 58302-B2A10 , 58302-A4B60 , 58302-A4B10 , 58302-A6A20 , 58302-1WA35 , 58302-B4A30 , 58302-A6A31 , 58302-C8A30 , 58302-A6A30 , 58302-3XA30 , 58302-1RA30 , 58302-2VA50 , 58302-3ZA70	see drawing

SBH - Brake pads rear

					OE numbers per ATE pn.	e.g. replaced pn. / miscellaneous
13.0460-5650.2	**605650**	HYUNDAI	i40 (12-)	1,7 CRDi	01.2015	58302-D4A65 , 58302-D4A55 , 58302-D7A70 , 58302-D3A70 , 58302-B2A10 , 58302-A4B60 , 58302-A4B10 , 58302-A6A20 , 58302-1WA35 , 58302-B4A30 , 58302-A6A31 , 58302-C8A30 , 58302-A6A30 , 58302-3XA30 , 58302-1RA30 , 58302-2VA50 , 58302-3ZA70	see drawing
		HYUNDAI	i40 (12-)		03.2012	58302-D4A65 , 58302-D4A55 , 58302-D7A70 , 58302-D3A70 , 58302-B2A10 , 58302-A4B60 , 58302-A4B10 , 58302-A6A20 , 58302-1WA35 , 58302-B4A30 , 58302-A6A31 , 58302-C8A30 , 58302-A6A30 , 58302-3XA30 , 58302-1RA30 , 58302-2VA50 , 58302-3ZA70	see drawing
		HYUNDAI	i40 (12-)	2,0 16V	03.2012	58302-D4A65 , 58302-D4A55 , 58302-D7A70 , 58302-D3A70 , 58302-B2A10 , 58302-A4B60 , 58302-A4B10 , 58302-A6A20 , 58302-1WA35 , 58302-B4A30 , 58302-A6A31 , 58302-C8A30 , 58302-A6A30 , 58302-3XA30 , 58302-1RA30 , 58302-2VA50 , 58302-3ZA70	see drawing
		HYUNDAI	i40 (12-)	2,0 CVVT	10.2012	58302-D4A65 , 58302-D4A55 , 58302-D7A70 , 58302-D3A70 , 58302-B2A10 , 58302-A4B60 , 58302-A4B10 , 58302-A6A20 , 58302-1WA35 , 58302-B4A30 , 58302-A6A31 , 58302-C8A30 , 58302-A6A30 , 58302-3XA30 , 58302-1RA30 , 58302-2VA50 , 58302-3ZA70	see drawing

SBH - Brake pads rear

								OE numbers per ATE pn.	e.g. replaced pn. / miscellaneous

SBH - Brake pads rear

13.0460-5650.2	**605650**	HYUNDAI	i40 (12-)	1,6 16V		03.2012		58302-D4A65 , 58302-D4A55 , 58302-D7A70 , 58302-D3A70 , 58302-B2A10 , 58302-A4B60 , 58302-A4B10 , 58302-A6A20 , 58302-1WA35 , 58302-B4A30 , 58302-A6A31 , 58302-C8A30 , 58302-A6A30 , 58302-3XA30 , 58302-1RA30 , 58302-2VA50 , 58302-3ZA70	see drawing
		HYUNDAI	i40 CW Kombi (11-)	2,0 GDI		03.2012		58302-D4A65 , 58302-D4A55 , 58302-D7A70 , 58302-D3A70 , 58302-B2A10 , 58302-A4B60 , 58302-A4B10 , 58302-A6A20 , 58302-1WA35 , 58302-B4A30 , 58302-A6A31 , 58302-C8A30 , 58302-A6A30 , 58302-3XA30 , 58302-1RA30 , 58302-2VA50 , 58302-3ZA70	see drawing
		HYUNDAI	i40 CW Kombi (11-)	1,6 16V		06.2011		58302-D4A65 , 58302-D4A55 , 58302-D7A70 , 58302-D3A70 , 58302-B2A10 , 58302-A4B60 , 58302-A4B10 , 58302-A6A20 , 58302-1WA35 , 58302-B4A30 , 58302-A6A31 , 58302-C8A30 , 58302-A6A30 , 58302-3XA30 , 58302-1RA30 , 58302-2VA50 , 58302-3ZA70	see drawing
		HYUNDAI	i40 CW Kombi (11-)	1,7 CRDi		01.2015		58302-D4A65 , 58302-D4A55 , 58302-D7A70 , 58302-D3A70 , 58302-B2A10 , 58302-A4B60 , 58302-A4B10 , 58302-A6A20 , 58302-1WA35 , 58302-B4A30 , 58302-A6A31 , 58302-C8A30 , 58302-A6A30 , 58302-3XA30 , 58302-1RA30 , 58302-2VA50 , 58302-3ZA70	see drawing

								OE numbers per ATE pn.	e.g. replaced pn. / miscellaneous

SBH - Brake pads rear

13.0460-5650.2	**605650**	HYUNDAI	i40 CW Kombi (11-)	1,7 CRDi		06.2011		58302-D4A65 , 58302-D4A55 , 58302-D7A70 , 58302-D3A70 , 58302-B2A10 , 58302-A4B60 , 58302-A4B10 , 58302-A6A20 , 58302-1WA35 , 58302-B4A30 , 58302-A6A31 , 58302-C8A30 , 58302-A6A30 , 58302-3XA30 , 58302-1RA30 , 58302-2VA50 , 58302-3ZA70	see drawing
		HYUNDAI	i40 CW Kombi (11-)	2,0 CVVT		10.2012		58302-D4A65 , 58302-D4A55 , 58302-D7A70 , 58302-D3A70 , 58302-B2A10 , 58302-A4B60 , 58302-A4B10 , 58302-A6A20 , 58302-1WA35 , 58302-B4A30 , 58302-A6A31 , 58302-C8A30 , 58302-A6A30 , 58302-3XA30 , 58302-1RA30 , 58302-2VA50 , 58302-3ZA70	see drawing
		HYUNDAI	i40 CW Kombi (11-)	2,0 16V		06.2011		58302-D4A65 , 58302-D4A55 , 58302-D7A70 , 58302-D3A70 , 58302-B2A10 , 58302-A4B60 , 58302-A4B10 , 58302-A6A20 , 58302-1WA35 , 58302-B4A30 , 58302-A6A31 , 58302-C8A30 , 58302-A6A30 , 58302-3XA30 , 58302-1RA30 , 58302-2VA50 , 58302-3ZA70	see drawing
		KIA	OPTIMA (TF) (10-15)	2,4 16V		06.2010	12.2015	58302-D4A65 , 58302-D4A55 , 58302-D7A70 , 58302-D3A70 , 58302-B2A10 , 58302-A4B60 , 58302-A4B10 , 58302-A6A20 , 58302-1WA35 , 58302-B4A30 , 58302-A6A31 , 58302-C8A30 , 58302-A6A30 , 58302-3XA30 , 58302-1RA30 , 58302-2VA50 , 58302-3ZA70	see drawing

							OE numbers per ATE pn.	e.g. replaced pn. / miscellaneous

SBH - Brake pads rear

13.0460-5650.2	**605650**	KIA	OPTIMA (TF) (10-15)	2,4 16V		03.2012	12.2015	58302-D4A65 , 58302-D4A55 , 58302-D7A70 , 58302-D3A70 , 58302-B2A10 , 58302-A4B60 , 58302-A4B10 , 58302-A6A20 , 58302-1WA35 , 58302-B4A30 , 58302-A6A31 , 58302-C8A30 , 58302-A6A30 , 58302-3XA30 , 58302-1RA30 , 58302-2VA50 , 58302-3ZA70	see drawing
		KIA	OPTIMA (TF) (10-15)	2,0 CVVT Hybrid		03.2012	12.2015	58302-D4A65 , 58302-D4A55 , 58302-D7A70 , 58302-D3A70 , 58302-B2A10 , 58302-A4B60 , 58302-A4B10 , 58302-A6A20 , 58302-1WA35 , 58302-B4A30 , 58302-A6A31 , 58302-C8A30 , 58302-A6A30 , 58302-3XA30 , 58302-1RA30 , 58302-2VA50 , 58302-3ZA70	see drawing
		KIA	OPTIMA (TF) (10-15)	2,0 CVVT		03.2012	12.2015	58302-D4A65 , 58302-D4A55 , 58302-D7A70 , 58302-D3A70 , 58302-B2A10 , 58302-A4B60 , 58302-A4B10 , 58302-A6A20 , 58302-1WA35 , 58302-B4A30 , 58302-A6A31 , 58302-C8A30 , 58302-A6A30 , 58302-3XA30 , 58302-1RA30 , 58302-2VA50 , 58302-3ZA70	see drawing
		KIA	OPTIMA (TF) (10-15)	2,0 16V		03.2012	12.2015	58302-D4A65 , 58302-D4A55 , 58302-D7A70 , 58302-D3A70 , 58302-B2A10 , 58302-A4B60 , 58302-A4B10 , 58302-A6A20 , 58302-1WA35 , 58302-B4A30 , 58302-A6A31 , 58302-C8A30 , 58302-A6A30 , 58302-3XA30 , 58302-1RA30 , 58302-2VA50 , 58302-3ZA70	see drawing

							OE numbers per ATE pn.	e.g. replaced pn. / miscellaneous

SBH - Brake pads rear

13.0460-5650.2	**605650**	KIA	OPTIMA (TF) (10-15)	1,7 CRDi		03.2012	12.2015	58302-D4A65 , 58302-D4A55 , 58302-D7A70 , 58302-D3A70 , 58302-B2A10 , 58302-A4B60 , 58302-A4B10 , 58302-A6A20 , 58302-1WA35 , 58302-B4A30 , 58302-A6A31 , 58302-C8A30 , 58302-A6A30 , 58302-3XA30 , 58302-1RA30 , 58302-2VA50 , 58302-3ZA70	see drawing
		KIA	OPTIMA / OPTIMA SW (JF) (15-)			11.2015		58302-D4A65 , 58302-D4A55 , 58302-D7A70 , 58302-D3A70 , 58302-B2A10 , 58302-A4B60 , 58302-A4B10 , 58302-A6A20 , 58302-1WA35 , 58302-B4A30 , 58302-A6A31 , 58302-C8A30 , 58302-A6A30 , 58302-3XA30 , 58302-1RA30 , 58302-2VA50 , 58302-3ZA70	see drawing
		KIA	OPTIMA / OPTIMA SW (JF) (15-)	2,0 GDi Hybrid		09.2015		58302-D4A65 , 58302-D4A55 , 58302-D7A70 , 58302-D3A70 , 58302-B2A10 , 58302-A4B60 , 58302-A4B10 , 58302-A6A20 , 58302-1WA35 , 58302-B4A30 , 58302-A6A31 , 58302-C8A30 , 58302-A6A30 , 58302-3XA30 , 58302-1RA30 , 58302-2VA50 , 58302-3ZA70	see drawing
		KIA	OPTIMA / OPTIMA SW (JF) (15-)	2,0 T-GDi		09.2015		58302-D4A65 , 58302-D4A55 , 58302-D7A70 , 58302-D3A70 , 58302-B2A10 , 58302-A4B60 , 58302-A4B10 , 58302-A6A20 , 58302-1WA35 , 58302-B4A30 , 58302-A6A31 , 58302-C8A30 , 58302-A6A30 , 58302-3XA30 , 58302-1RA30 , 58302-2VA50 , 58302-3ZA70	see drawing

								OE numbers per ATE pn.	e.g. replaced pn. / miscellaneous

SBH - Brake pads rear

13.0460-5650.2	**605650**	KIA	OPTIMA / OPTIMA SW (JF) (15-)	2,0 CVVL		09.2015		58302-D4A65 , 58302-D4A55 , 58302-D7A70 , 58302-D3A70 , 58302-B2A10 , 58302-A4B60 , 58302-A4B10 , 58302-A6A20 , 58302-1WA35 , 58302-B4A30 , 58302-A6A31 , 58302-C8A30 , 58302-A6A30 , 58302-3XA30 , 58302-1RA30 , 58302-2VA50 , 58302-3ZA70	see drawing
		KIA	OPTIMA / OPTIMA SW (JF) (15-)	2,4 GDi		09.2015		58302-D4A65 , 58302-D4A55 , 58302-D7A70 , 58302-D3A70 , 58302-B2A10 , 58302-A4B60 , 58302-A4B10 , 58302-A6A20 , 58302-1WA35 , 58302-B4A30 , 58302-A6A31 , 58302-C8A30 , 58302-A6A30 , 58302-3XA30 , 58302-1RA30 , 58302-2VA50 , 58302-3ZA70	see drawing
		KIA	PRO CEE'D (13-)	1,0 T-GDI		07.2015		58302-D4A65 , 58302-D4A55 , 58302-D7A70 , 58302-D3A70 , 58302-B2A10 , 58302-A4B60 , 58302-A4B10 , 58302-A6A20 , 58302-1WA35 , 58302-B4A30 , 58302-A6A31 , 58302-C8A30 , 58302-A6A30 , 58302-3XA30 , 58302-1RA30 , 58302-2VA50 , 58302-3ZA70	see drawing
		KIA	PRO CEE'D (13-)	1,4 MPI		04.2015		58302-D4A65 , 58302-D4A55 , 58302-D7A70 , 58302-D3A70 , 58302-B2A10 , 58302-A4B60 , 58302-A4B10 , 58302-A6A20 , 58302-1WA35 , 58302-B4A30 , 58302-A6A31 , 58302-C8A30 , 58302-A6A30 , 58302-3XA30 , 58302-1RA30 , 58302-2VA50 , 58302-3ZA70	see drawing

								OE numbers per ATE pn.	e.g. replaced pn. / miscellaneous

SBH - Brake pads rear

13.0460-5650.2	**605650**	KIA	PRO CEE'D (13-)	1,4 MPI		07.2013		58302-D4A65 , 58302-D4A55 , 58302-D7A70 , 58302-D3A70 , 58302-B2A10 , 58302-A4B60 , 58302-A4B10 , 58302-A6A20 , 58302-1WA35 , 58302-B4A30 , 58302-A6A31 , 58302-C8A30 , 58302-A6A30 , 58302-3XA30 , 58302-1RA30 , 58302-2VA50 , 58302-3ZA70	see drawing
		KIA	PRO CEE'D (13-)	1,6 CRDi		03.2013		58302-D4A65 , 58302-D4A55 , 58302-D7A70 , 58302-D3A70 , 58302-B2A10 , 58302-A4B60 , 58302-A4B10 , 58302-A6A20 , 58302-1WA35 , 58302-B4A30 , 58302-A6A31 , 58302-C8A30 , 58302-A6A30 , 58302-3XA30 , 58302-1RA30 , 58302-2VA50 , 58302-3ZA70	see drawing
		KIA	PRO CEE'D (13-)	1,6 CRDi 136		07.2015		58302-D4A65 , 58302-D4A55 , 58302-D7A70 , 58302-D3A70 , 58302-B2A10 , 58302-A4B60 , 58302-A4B10 , 58302-A6A20 , 58302-1WA35 , 58302-B4A30 , 58302-A6A31 , 58302-C8A30 , 58302-A6A30 , 58302-3XA30 , 58302-1RA30 , 58302-2VA50 , 58302-3ZA70	see drawing
		KIA	PRO CEE'D (13-)	1,6 CVVT		03.2013		58302-D4A65 , 58302-D4A55 , 58302-D7A70 , 58302-D3A70 , 58302-B2A10 , 58302-A4B60 , 58302-A4B10 , 58302-A6A20 , 58302-1WA35 , 58302-B4A30 , 58302-A6A31 , 58302-C8A30 , 58302-A6A30 , 58302-3XA30 , 58302-1RA30 , 58302-2VA50 , 58302-3ZA70	see drawing

								OE numbers per ATE pn.	e.g. replaced pn. / miscellaneous

SBH - Brake pads rear

13.0460-5650.2	**605650**	KIA	PRO CEE'D (13-)	1,6 GDI		03.2013		58302-D4A65 , 58302-D4A55 , 58302-D7A70 , 58302-D3A70 , 58302-B2A10 , 58302-A4B60 , 58302-A4B10 , 58302-A6A20 , 58302-1WA35 , 58302-B4A30 , 58302-A6A31 , 58302-C8A30 , 58302-A6A30 , 58302-3XA30 , 58302-1RA30 , 58302-2VA50 , 58302-3ZA70	see drawing
		KIA	PRO CEE'D (13-)	1,4 CRDi		03.2013		58302-D4A65 , 58302-D4A55 , 58302-D7A70 , 58302-D3A70 , 58302-B2A10 , 58302-A4B60 , 58302-A4B10 , 58302-A6A20 , 58302-1WA35 , 58302-B4A30 , 58302-A6A31 , 58302-C8A30 , 58302-A6A30 , 58302-3XA30 , 58302-1RA30 , 58302-2VA50 , 58302-3ZA70	see drawing
		KIA	PRO CEE'D (13-)	1,4 CVVT		03.2013		58302-D4A65 , 58302-D4A55 , 58302-D7A70 , 58302-D3A70 , 58302-B2A10 , 58302-A4B60 , 58302-A4B10 , 58302-A6A20 , 58302-1WA35 , 58302-B4A30 , 58302-A6A31 , 58302-C8A30 , 58302-A6A30 , 58302-3XA30 , 58302-1RA30 , 58302-2VA50 , 58302-3ZA70	see drawing
		KIA	RIO III (UB) (11-17)	1,25 CVVT		09.2011		58302-D4A65 , 58302-D4A55 , 58302-D7A70 , 58302-D3A70 , 58302-B2A10 , 58302-A4B60 , 58302-A4B10 , 58302-A6A20 , 58302-1WA35 , 58302-B4A30 , 58302-A6A31 , 58302-C8A30 , 58302-A6A30 , 58302-3XA30 , 58302-1RA30 , 58302-2VA50 , 58302-3ZA70	see drawing

								OE numbers per ATE pn.	e.g. replaced pn. / miscellaneous

SBH - Brake pads rear

13.0460-5650.2	**605650**	KIA	RIO III (UB) (11-17)	1,6 CVVT		06.2012		58302-D4A65 , 58302-D4A55 , 58302-D7A70 , 58302-D3A70 , 58302-B2A10 , 58302-A4B60 , 58302-A4B10 , 58302-A6A20 , 58302-1WA35 , 58302-B4A30 , 58302-A6A31 , 58302-C8A30 , 58302-A6A30 , 58302-3XA30 , 58302-1RA30 , 58302-2VA50 , 58302-3ZA70	see drawing
		KIA	RIO III (UB) (11-17)	1,4 CRDi		09.2011		58302-D4A65 , 58302-D4A55 , 58302-D7A70 , 58302-D3A70 , 58302-B2A10 , 58302-A4B60 , 58302-A4B10 , 58302-A6A20 , 58302-1WA35 , 58302-B4A30 , 58302-A6A31 , 58302-C8A30 , 58302-A6A30 , 58302-3XA30 , 58302-1RA30 , 58302-2VA50 , 58302-3ZA70	see drawing
		KIA	RIO III (UB) (11-17)	1,2 CVVT		11.2014		58302-D4A65 , 58302-D4A55 , 58302-D7A70 , 58302-D3A70 , 58302-B2A10 , 58302-A4B60 , 58302-A4B10 , 58302-A6A20 , 58302-1WA35 , 58302-B4A30 , 58302-A6A31 , 58302-C8A30 , 58302-A6A30 , 58302-3XA30 , 58302-1RA30 , 58302-2VA50 , 58302-3ZA70	see drawing
		KIA	RIO III (UB) (11-17)			09.2011		58302-D4A65 , 58302-D4A55 , 58302-D7A70 , 58302-D3A70 , 58302-B2A10 , 58302-A4B60 , 58302-A4B10 , 58302-A6A20 , 58302-1WA35 , 58302-B4A30 , 58302-A6A31 , 58302-C8A30 , 58302-A6A30 , 58302-3XA30 , 58302-1RA30 , 58302-2VA50 , 58302-3ZA70	see drawing

								OE numbers per ATE pn.	e.g. replaced pn. / miscellaneous

SBH - Brake pads rear

13.0460-5650.2	**605650**	KIA	RIO III (UB) (11-17)	1,1 CRDi		09.2011		58302-D4A65 , 58302-D4A55 , 58302-D7A70 , 58302-D3A70 , 58302-B2A10 , 58302-A4B60 , 58302-A4B10 , 58302-A6A20 , 58302-1WA35 , 58302-B4A30 , 58302-A6A31 , 58302-C8A30 , 58302-A6A30 , 58302-3XA30 , 58302-1RA30 , 58302-2VA50 , 58302-3ZA70	see drawing
		KIA	RIO III (UB) (11-17)	1,4 CVVT		09.2011		58302-D4A65 , 58302-D4A55 , 58302-D7A70 , 58302-D3A70 , 58302-B2A10 , 58302-A4B60 , 58302-A4B10 , 58302-A6A20 , 58302-1WA35 , 58302-B4A30 , 58302-A6A31 , 58302-C8A30 , 58302-A6A30 , 58302-3XA30 , 58302-1RA30 , 58302-2VA50 , 58302-3ZA70	see drawing
		KIA	SOUL (14-)	1,6 CRDi		02.2014		58302-D4A65 , 58302-D4A55 , 58302-D7A70 , 58302-D3A70 , 58302-B2A10 , 58302-A4B60 , 58302-A4B10 , 58302-A6A20 , 58302-1WA35 , 58302-B4A30 , 58302-A6A31 , 58302-C8A30 , 58302-A6A30 , 58302-3XA30 , 58302-1RA30 , 58302-2VA50 , 58302-3ZA70	see drawing
		KIA	SOUL (14-)	2,0 CVVT		04.2014		58302-D4A65 , 58302-D4A55 , 58302-D7A70 , 58302-D3A70 , 58302-B2A10 , 58302-A4B60 , 58302-A4B10 , 58302-A6A20 , 58302-1WA35 , 58302-B4A30 , 58302-A6A31 , 58302-C8A30 , 58302-A6A30 , 58302-3XA30 , 58302-1RA30 , 58302-2VA50 , 58302-3ZA70	see drawing

								OE numbers per ATE pn.	e.g. replaced pn. / miscellaneous

SBH - Brake pads rear

13.0460-5650.2	**605650**	KIA	SOUL (14-)	1,6 GDI		02.2014		58302-D4A65 , 58302-D4A55 , 58302-D7A70 , 58302-D3A70 , 58302-B2A10 , 58302-A4B60 , 58302-A4B10 , 58302-A6A20 , 58302-1WA35 , 58302-B4A30 , 58302-A6A31 , 58302-C8A30 , 58302-A6A30 , 58302-3XA30 , 58302-1RA30 , 58302-2VA50 , 58302-3ZA70	see drawing
		KIA	SOUL (14-)	1,6 CRDi 136		04.2015		58302-D4A65 , 58302-D4A55 , 58302-D7A70 , 58302-D3A70 , 58302-B2A10 , 58302-A4B60 , 58302-A4B10 , 58302-A6A20 , 58302-1WA35 , 58302-B4A30 , 58302-A6A31 , 58302-C8A30 , 58302-A6A30 , 58302-3XA30 , 58302-1RA30 , 58302-2VA50 , 58302-3ZA70	see drawing
		KIA	SOUL (14-)	1,6 CVVT		02.2014		58302-D4A65 , 58302-D4A55 , 58302-D7A70 , 58302-D3A70 , 58302-B2A10 , 58302-A4B60 , 58302-A4B10 , 58302-A6A20 , 58302-1WA35 , 58302-B4A30 , 58302-A6A31 , 58302-C8A30 , 58302-A6A30 , 58302-3XA30 , 58302-1RA30 , 58302-2VA50 , 58302-3ZA70	see drawing
		KIA	SPORTAGE (15-)	2,0 CRDi AWD		09.2015		58302-D4A65 , 58302-D4A55 , 58302-D7A70 , 58302-D3A70 , 58302-B2A10 , 58302-A4B60 , 58302-A4B10 , 58302-A6A20 , 58302-1WA35 , 58302-B4A30 , 58302-A6A31 , 58302-C8A30 , 58302-A6A30 , 58302-3XA30 , 58302-1RA30 , 58302-2VA50 , 58302-3ZA70	see drawing

								OE numbers per ATE pn.	e.g. replaced pn. / miscellaneous

SBH - Brake pads rear

13.0460-5650.2	**605650**	KIA	SPORTAGE (15-)	2,0 CRDi		09.2015		58302-D4A65 , 58302-D4A55 , 58302-D7A70 , 58302-D3A70 , 58302-B2A10 , 58302-A4B60 , 58302-A4B10 , 58302-A6A20 , 58302-1WA35 , 58302-B4A30 , 58302-A6A31 , 58302-C8A30 , 58302-A6A30 , 58302-3XA30 , 58302-1RA30 , 58302-2VA50 , 58302-3ZA70	see drawing
		KIA	SPORTAGE (15-)	1,7 CRDi		11.2016		58302-D4A65 , 58302-D4A55 , 58302-D7A70 , 58302-D3A70 , 58302-B2A10 , 58302-A4B60 , 58302-A4B10 , 58302-A6A20 , 58302-1WA35 , 58302-B4A30 , 58302-A6A31 , 58302-C8A30 , 58302-A6A30 , 58302-3XA30 , 58302-1RA30 , 58302-2VA50 , 58302-3ZA70	see drawing
		KIA	SPORTAGE (15-)			09.2015		58302-D4A65 , 58302-D4A55 , 58302-D7A70 , 58302-D3A70 , 58302-B2A10 , 58302-A4B60 , 58302-A4B10 , 58302-A6A20 , 58302-1WA35 , 58302-B4A30 , 58302-A6A31 , 58302-C8A30 , 58302-A6A30 , 58302-3XA30 , 58302-1RA30 , 58302-2VA50 , 58302-3ZA70	see drawing
		KIA	SPORTAGE (15-)	1,6 GDI AWD		09.2015		58302-D4A65 , 58302-D4A55 , 58302-D7A70 , 58302-D3A70 , 58302-B2A10 , 58302-A4B60 , 58302-A4B10 , 58302-A6A20 , 58302-1WA35 , 58302-B4A30 , 58302-A6A31 , 58302-C8A30 , 58302-A6A30 , 58302-3XA30 , 58302-1RA30 , 58302-2VA50 , 58302-3ZA70	see drawing

SBH - Brake pads rear

13.0460-5650.2	**605650**	KIA	SPORTAGE (15-)	1,6 GDI		09.2015		58302-D4A65 , 58302-D4A55 , 58302-D7A70 , 58302-D3A70 , 58302-B2A10 , 58302-A4B60 , 58302-A4B10 , 58302-A6A20 , 58302-1WA35 , 58302-B4A30 , 58302-A6A31 , 58302-C8A30 , 58302-A6A30 , 58302-3XA30 , 58302-1RA30 , 58302-2VA50 , 58302-3ZA70	see drawing
		HYUNDAI	TUCSON (15-)			06.2015		58302-D4A65 , 58302-D4A55 , 58302-D7A70 , 58302-D3A70 , 58302-B2A10 , 58302-A4B60 , 58302-A4B10 , 58302-A6A20 , 58302-1WA35 , 58302-B4A30 , 58302-A6A31 , 58302-C8A30 , 58302-A6A30 , 58302-3XA30 , 58302-1RA30 , 58302-2VA50 , 58302-3ZA70	see drawing
		HYUNDAI	TUCSON (15-)	1,6 T-GDI		06.2015		58302-D4A65 , 58302-D4A55 , 58302-D7A70 , 58302-D3A70 , 58302-B2A10 , 58302-A4B60 , 58302-A4B10 , 58302-A6A20 , 58302-1WA35 , 58302-B4A30 , 58302-A6A31 , 58302-C8A30 , 58302-A6A30 , 58302-3XA30 , 58302-1RA30 , 58302-2VA50 , 58302-3ZA70	see drawing
		HYUNDAI	TUCSON (15-)	2		06.2015		58302-D4A65 , 58302-D4A55 , 58302-D7A70 , 58302-D3A70 , 58302-B2A10 , 58302-A4B60 , 58302-A4B10 , 58302-A6A20 , 58302-1WA35 , 58302-B4A30 , 58302-A6A31 , 58302-C8A30 , 58302-A6A30 , 58302-3XA30 , 58302-1RA30 , 58302-2VA50 , 58302-3ZA70	see drawing

								OE numbers per ATE pn.	e.g. replaced pn. / miscellaneous

SBH - Brake pads rear

13.0460-5650.2	**605650**	HYUNDAI	TUCSON (15-)	1,7 CRDi		06.2015		58302-D4A65 , 58302-D4A55 , 58302-D7A70 , 58302-D3A70 , 58302-B2A10 , 58302-A4B60 , 58302-A4B10 , 58302-A6A20 , 58302-1WA35 , 58302-B4A30 , 58302-A6A31 , 58302-C8A30 , 58302-A6A30 , 58302-3XA30 , 58302-1RA30 , 58302-2VA50 , 58302-3ZA70	see drawing
		HYUNDAI	TUCSON (15-)	2,0 CRDi 4WD		06.2015		58302-D4A65 , 58302-D4A55 , 58302-D7A70 , 58302-D3A70 , 58302-B2A10 , 58302-A4B60 , 58302-A4B10 , 58302-A6A20 , 58302-1WA35 , 58302-B4A30 , 58302-A6A31 , 58302-C8A30 , 58302-A6A30 , 58302-3XA30 , 58302-1RA30 , 58302-2VA50 , 58302-3ZA70	see drawing
		HYUNDAI	TUCSON (15-)	2,0 CRDi		06.2015		58302-D4A65 , 58302-D4A55 , 58302-D7A70 , 58302-D3A70 , 58302-B2A10 , 58302-A4B60 , 58302-A4B10 , 58302-A6A20 , 58302-1WA35 , 58302-B4A30 , 58302-A6A31 , 58302-C8A30 , 58302-A6A30 , 58302-3XA30 , 58302-1RA30 , 58302-2VA50 , 58302-3ZA70	see drawing
		HYUNDAI	TUCSON (15-)	1,6 T-GDI 4WD		06.2015		58302-D4A65 , 58302-D4A55 , 58302-D7A70 , 58302-D3A70 , 58302-B2A10 , 58302-A4B60 , 58302-A4B10 , 58302-A6A20 , 58302-1WA35 , 58302-B4A30 , 58302-A6A31 , 58302-C8A30 , 58302-A6A30 , 58302-3XA30 , 58302-1RA30 , 58302-2VA50 , 58302-3ZA70	see drawing

SBH - Brake pads rear

13.0460-5650.2	**605650**	HYUNDAI	VELOSTER (11-)	1,6 MPI		04.2011		58302-D4A65 , 58302-D4A55 , 58302-D7A70 , 58302-D3A70 , 58302-B2A10 , 58302-A4B60 , 58302-A4B10 , 58302-A6A20 , 58302-1WA35 , 58302-B4A30 , 58302-A6A31 , 58302-C8A30 , 58302-A6A30 , 58302-3XA30 , 58302-1RA30 , 58302-2VA50 , 58302-3ZA70	see drawing
		HYUNDAI	VELOSTER (11-)	1,6 GDI		03.2011		58302-D4A65 , 58302-D4A55 , 58302-D7A70 , 58302-D3A70 , 58302-B2A10 , 58302-A4B60 , 58302-A4B10 , 58302-A6A20 , 58302-1WA35 , 58302-B4A30 , 58302-A6A31 , 58302-C8A30 , 58302-A6A30 , 58302-3XA30 , 58302-1RA30 , 58302-2VA50 , 58302-3ZA70	see drawing
		HYUNDAI	VELOSTER (11-)	1,6 16V		10.2011		58302-D4A65 , 58302-D4A55 , 58302-D7A70 , 58302-D3A70 , 58302-B2A10 , 58302-A4B60 , 58302-A4B10 , 58302-A6A20 , 58302-1WA35 , 58302-B4A30 , 58302-A6A31 , 58302-C8A30 , 58302-A6A30 , 58302-3XA30 , 58302-1RA30 , 58302-2VA50 , 58302-3ZA70	see drawing
		HYUNDAI	VELOSTER (11-)	1,6 T-GDI		10.2012		58302-D4A65 , 58302-D4A55 , 58302-D7A70 , 58302-D3A70 , 58302-B2A10 , 58302-A4B60 , 58302-A4B10 , 58302-A6A20 , 58302-1WA35 , 58302-B4A30 , 58302-A6A31 , 58302-C8A30 , 58302-A6A30 , 58302-3XA30 , 58302-1RA30 , 58302-2VA50 , 58302-3ZA70	see drawing

				OE numbers per ATE pn.	e.g. replaced pn. / miscellaneous

SBH - Brake pads rear

SBV - Brake pads front

13.0460-2603.2	**602603**	CITROEN	C4 II Limousine (B7) (10-)	1,2 THP 110		02.2015		4254 A9	see drawing
		CITROEN	C4 II Limousine (B7) (10-)	1,6 HDi 90		11.2009		4254 A9	see drawing
		CITROEN	C4 II Limousine (B7) (10-)	1,4 VTi 95		11.2009		4254 A9	see drawing
13.0460-5653.2	**605653**	HYUNDAI	i10 (13-)	1,2 16V		12.2013		58101-B9A70 , 58101-B9A30	see drawing
		HYUNDAI	i10 (13-)	1,0 12V		12.2013		58101-B9A70 , 58101-B9A30	see drawing
		HYUNDAI	i10 (13-)	1,0 12V LPG		02.2014		58101-B9A70 , 58101-B9A30	see drawing
13.0460-5656.2	**605656**	SUZUKI	SX4 (13-)	1,6 DDiS 4x4		08.2013		55810-61M00	see drawing
		SUZUKI	SX4 (13-)	1,6 16V		08.2013		55810-61M00	see drawing
		SUZUKI	SX4 (13-)	1,6 DDiS		08.2013		55810-61M00	see drawing
		SUZUKI	SX4 (13-)	1,6 16V 4x4		08.2013		55810-61M00	see drawing
		SUZUKI	VITARA (LY) (15-)	1,6 DDiS 4x4		02.2015		55810-61M00	see drawing
		SUZUKI	VITARA (LY) (15-)	1,6 DDiS		02.2015		55810-61M00	see drawing
		SUZUKI	VITARA (LY) (15-)	1,6 16V 4x4		05.2015		55810-61M00	see drawing
		SUZUKI	VITARA (LY) (15-)			02.2015		55810-61M00	see drawing
		SUZUKI	VITARA (LY) (15-)	1,6 16V		02.2015		55810-61M00	see drawing
13.0460-5659.2	**605659**	KIA	CERATO KOUP (09-)	1,6 CVVT		09.2013		58101-A7A20 , 58101-2TA61	see drawing
		KIA	OPTIMA (TF) (10-15)	2,4 16V		03.2012	12.2015	58101-A7A20 , 58101-2TA61	see drawing

				OE numbers per ATE pn.	e.g. replaced pn. / miscellaneous

SBV - Brake pads front

13.0460-5659.2	**605659**	KIA	OPTIMA (TF) (10-15)	1,7 CRDi		03.2012	12.2015	58101-A7A20 , 58101-2TA61	see drawing
		KIA	OPTIMA (TF) (10-15)	2,0 16V		03.2012	12.2015	58101-A7A20 , 58101-2TA61	see drawing
		KIA	OPTIMA (TF) (10-15)	2,0 CVVT		03.2012	12.2015	58101-A7A20 , 58101-2TA61	see drawing
		KIA	OPTIMA (TF) (10-15)	2,4 16V		06.2010	12.2015	58101-A7A20 , 58101-2TA61	see drawing
13.0460-5674.2	**605674**	MAZDA	2 (DJ) (14-)	1,5 D 105		11.2014		DBY1-33-28ZA , DBY1-33-28Z , DAY5-33-28ZA	see drawing
		MAZDA	2 (DJ) (14-)	1,5 G 115		11.2014		DBY1-33-28ZA , DBY1-33-28Z , DAY5-33-28ZA	see drawing
		MAZDA	2 (DJ) (14-)	1,5 G 90		11.2014		DBY1-33-28ZA , DBY1-33-28Z , DAY5-33-28ZA	see drawing
		MAZDA	2 (DJ) (14-)	1,5 G 75		11.2014		DBY1-33-28ZA , DBY1-33-28Z , DAY5-33-28ZA	see drawing
13.0470-3869.2	**LD3869**	PEUGEOT	308 II (T9) (13-)	1,6 THP 150		03.2014		16 106 992 80	
		PEUGEOT	308 II (T9) (13-)	2,0 HDi 150		11.2013		16 106 992 80	
		PEUGEOT	308 II (T9) (13-)	1,6 VTi		03.2014		16 106 992 80	
		PEUGEOT	308 II (T9) (13-)	1,6 THP 163		06.2014		16 106 992 80	
		PEUGEOT	308 II (T9) (13-)	1,6 THP 155		09.2013		16 106 992 80	
		PEUGEOT	308 II (T9) (13-)	1,6 HDi 100		04.2014		16 106 992 80	
		PEUGEOT	308 II (T9) (13-)	1,6 GT 205		06.2014		16 106 992 80	
		PEUGEOT	308 II (T9) (13-)	2,0 GT HDi 180		06.2014		16 106 992 80	
		PEUGEOT	308 II (T9) (13-)	1,6 HDi 92		09.2013		16 106 992 80	
		PEUGEOT	308 II (T9) (13-)	1,6 HDi 115		09.2013		16 106 992 80	

				OE numbers per ATE pn.	e.g. replaced pn. / miscellaneous

SBV - Brake pads front

13.0470-3869.2	**LD3869**	PEUGEOT	308 II (T9) (13-)	1,2 VTi 82		09.2013		16 106 992 80	
		PEUGEOT	308 II (T9) (13-)	1,6 GTi 270		06.2015		16 106 992 80	
		PEUGEOT	308 II (T9) (13-)	1,6 GTi 250		08.2015		16 106 992 80	
		PEUGEOT	308 II (T9) (13-)	1,2 THP 110		11.2013		16 106 992 80	
		PEUGEOT	308 II (T9) (13-)	1,6 THP 125		09.2013		16 106 992 80	
		PEUGEOT	308 II (T9) (13-)	1,2 THP 130		11.2013		16 106 992 80	
		PEUGEOT	308 II (T9) (13-)	1,6 HDi 120		11.2013		16 106 992 80	
		PEUGEOT	308 II SW (T9) (14-)	1,6 e-HDi		03.2014		16 106 992 80	
		PEUGEOT	308 II SW (T9) (14-)	2,0 GT HDi 180		06.2014		16 106 992 80	
		PEUGEOT	308 II SW (T9) (14-)	2,0 BlueHDi 180		06.2014		16 106 992 80	
		PEUGEOT	308 II SW (T9) (14-)	1,6 VTi		03.2014		16 106 992 80	
		PEUGEOT	308 II SW (T9) (14-)	1,6 THP 150		03.2014		16 106 992 80	
		PEUGEOT	308 II SW (T9) (14-)	1,6 THP 125		03.2014		16 106 992 80	
		PEUGEOT	308 II SW (T9) (14-)	1,6 THP		03.2014		16 106 992 80	
		PEUGEOT	308 II SW (T9) (14-)	1,6 GT 205		06.2014		16 106 992 80	
		PEUGEOT	308 II SW (T9) (14-)	1,6 BlueHDi		03.2014		16 106 992 80	
		PEUGEOT	308 II SW (T9) (14-)	1,2 e-THP		08.2014		16 106 992 80	
		PEUGEOT	308 II SW (T9) (14-)			03.2014		16 106 992 80	
		PEUGEOT	308 II SW (T9) (14-)	2,0 BlueHDi		03.2014		16 106 992 80	
		PEUGEOT	308 II SW (T9) (14-)	1,6 HDi		03.2014		16 106 992 80	

								OE numbers per ATE pn.	e.g. replaced pn. / miscellaneous

SBV - Brake pads front

13.0470-3869.2	**LD3869**	PEUGEOT	308 II SW (T9) (14-)	1,6 THP 163		06.2014		16 106 992 80	

SCH - Brake disc rear

24.0112-0300.1	**412300**	MERCEDES BENZ	C-Klasse (A205) Cabrio (16-)	C 180		06.2016		A 000 423 05 12 , 000 423 05 12	
		MERCEDES BENZ	C-Klasse (A205) Cabrio (16-)	C 200		06.2016		A 000 423 05 12 , 000 423 05 12	
		MERCEDES BENZ	C-Klasse (A205) Cabrio (16-)	C 250 d		06.2016		A 000 423 05 12 , 000 423 05 12	
		MERCEDES BENZ	C-Klasse (A205) Cabrio (16-)	C 200 4-matic		06.2016		A 000 423 05 12 , 000 423 05 12	
		MERCEDES BENZ	C-Klasse (A205) Cabrio (16-)	C 220 d 4-matic		06.2016		A 000 423 05 12 , 000 423 05 12	
		MERCEDES BENZ	C-Klasse (A205) Cabrio (16-)	C 250		06.2016		A 000 423 05 12 , 000 423 05 12	
		MERCEDES BENZ	C-Klasse (A205) Cabrio (16-)	C 220 d		06.2016		A 000 423 05 12 , 000 423 05 12	
		MERCEDES BENZ	C-Klasse (C205) Coupe (15-)	C 250 d 4-matic		04.2016		A 000 423 05 12 , 000 423 05 12	
		MERCEDES BENZ	C-Klasse (C205) Coupe (15-)	C 250		10.2015		A 000 423 05 12 , 000 423 05 12	
		MERCEDES BENZ	C-Klasse (C205) Coupe (15-)	C 250 d		10.2015		A 000 423 05 12 , 000 423 05 12	
		MERCEDES BENZ	C-Klasse (C205) Coupe (15-)	C 220 d 4-matic		04.2016		A 000 423 05 12 , 000 423 05 12	

				OE numbers per ATE pn.	e.g. replaced pn. / miscellaneous

SCH - Brake disc rear

24.0112-0300.1	**412300**	MERCEDES BENZ	C-Klasse (C205) Coupe (15-)	C 220 d		10.2015		A 000 423 05 12 , 000 423 05 12	
		MERCEDES BENZ	C-Klasse (C205) Coupe (15-)	C 200 4-matic		04.2016		A 000 423 05 12 , 000 423 05 12	
		MERCEDES BENZ	C-Klasse (C205) Coupe (15-)	C 200		10.2015		A 000 423 05 12 , 000 423 05 12	
		MERCEDES BENZ	C-Klasse (C205) Coupe (15-)	C 180		10.2015		A 000 423 05 12 , 000 423 05 12	
		MERCEDES BENZ	C-Klasse (S205) Kombi (14-)	C 180 BlueTec		09.2014		A 000 423 05 12 , 000 423 05 12	
		MERCEDES BENZ	C-Klasse (S205) Kombi (14-)	C 180		09.2014		A 000 423 05 12 , 000 423 05 12	
		MERCEDES BENZ	C-Klasse (S205) Kombi (14-)	C 200		09.2014		A 000 423 05 12 , 000 423 05 12	
		MERCEDES BENZ	C-Klasse (S205) Kombi (14-)	C 200 4-matic		04.2015		A 000 423 05 12 , 000 423 05 12	
		MERCEDES BENZ	C-Klasse (S205) Kombi (14-)	C 200 BlueTec		09.2014		A 000 423 05 12 , 000 423 05 12	
		MERCEDES BENZ	C-Klasse (S205) Kombi (14-)	C 200 d		10.2015		A 000 423 05 12 , 000 423 05 12	
		MERCEDES BENZ	C-Klasse (S205) Kombi (14-)	C 220 BlueTec		09.2014		A 000 423 05 12 , 000 423 05 12	
		MERCEDES BENZ	C-Klasse (S205) Kombi (14-)	C 220 d 4-matic		04.2015		A 000 423 05 12 , 000 423 05 12	
		MERCEDES BENZ	C-Klasse (S205) Kombi (14-)	C 250 BlueTec		09.2014		A 000 423 05 12 , 000 423 05 12	

SCH - Brake disc rear

24.0112-0300.1	**412300**	MERCEDES BENZ	C-Klasse (S205) Kombi (14-)	C 250 CGI		09.2014		A 000 423 05 12 , 000 423 05 12	
		MERCEDES BENZ	C-Klasse (S205) Kombi (14-)	C 160		04.2015		A 000 423 05 12 , 000 423 05 12	
		MERCEDES BENZ	C-Klasse (S205) Kombi (14-)	C 250 BlueTec 4-matic		10.2014		A 000 423 05 12 , 000 423 05 12	
		MERCEDES BENZ	C-Klasse (W205) Limousine (14-)	C 220 BlueTec		02.2014		A 000 423 05 12 , 000 423 05 12	
		MERCEDES BENZ	C-Klasse (W205) Limousine (14-)	C 250 BlueTec 4-matic		02.2014		A 000 423 05 12 , 000 423 05 12	
		MERCEDES BENZ	C-Klasse (W205) Limousine (14-)	C 250 BlueTec		02.2014		A 000 423 05 12 , 000 423 05 12	
		MERCEDES BENZ	C-Klasse (W205) Limousine (14-)	C 250 CGI		03.2014		A 000 423 05 12 , 000 423 05 12	
		MERCEDES BENZ	C-Klasse (W205) Limousine (14-)	C 220 BlueTec 4-matic		04.2015		A 000 423 05 12 , 000 423 05 12	
		MERCEDES BENZ	C-Klasse (W205) Limousine (14-)	C 220 BlueTec		03.2014		A 000 423 05 12 , 000 423 05 12	
		MERCEDES BENZ	C-Klasse (W205) Limousine (14-)	C 200 4-matic		04.2015		A 000 423 05 12 , 000 423 05 12	
		MERCEDES BENZ	C-Klasse (W205) Limousine (14-)	C 160		04.2015		A 000 423 05 12 , 000 423 05 12	
		MERCEDES BENZ	C-Klasse (W205) Limousine (14-)	C 180		02.2014		A 000 423 05 12 , 000 423 05 12	
		MERCEDES BENZ	C-Klasse (W205) Limousine (14-)	C 180 BlueTec		05.2014		A 000 423 05 12 , 000 423 05 12	

								OE numbers per ATE pn.	e.g. replaced pn. / miscellaneous

SCH - Brake disc rear

24.0112-0300.1	**412300**	MERCEDES BENZ	C-Klasse (W205) Limousine (14-)	C 200		02.2014		A 000 423 05 12 , 000 423 05 12	
		MERCEDES BENZ	C-Klasse (W205) Limousine (14-)	C 200 d		10.2015		A 000 423 05 12 , 000 423 05 12	
		MERCEDES BENZ	C-Klasse (W205) Limousine (14-)	C 200 BlueTec		05.2014		A 000 423 05 12 , 000 423 05 12	

SCV - Brake disc front

24.0120-0249.1	**420249**	OPEL	KARL / Vauxhall Viva (15-)	1,0 LPG		02.2015		13584676 , 5 69 130	
		OPEL	KARL / Vauxhall Viva (15-)	1		01.2015		13584676 , 5 69 130	
24.0124-0300.1	**424300**	MERCEDES BENZ	C-Klasse (A205) Cabrio (16-)	C 180		06.2016		A 000 421 24 12 , 000 421 24 12	
		MERCEDES BENZ	C-Klasse (C205) Coupe (15-)			10.2015		A 000 421 24 12 , 000 421 24 12	
		MERCEDES BENZ	C-Klasse (S205) Kombi (14-)	C 200 BlueTec		09.2014		A 000 421 24 12 , 000 421 24 12	
		MERCEDES BENZ	C-Klasse (S205) Kombi (14-)	C 180		09.2014		A 000 421 24 12 , 000 421 24 12	
		MERCEDES BENZ	C-Klasse (S205) Kombi (14-)	C 180 BlueTec		09.2014		A 000 421 24 12 , 000 421 24 12	
		MERCEDES BENZ	C-Klasse (S205) Kombi (14-)	C 160		04.2015		A 000 421 24 12 , 000 421 24 12	
		MERCEDES BENZ	C-Klasse (W205) Limousine (14-)	C 200 BlueTec		05.2014		A 000 421 24 12 , 000 421 24 12	

SCV - Brake disc front

24.0124-0300.1	**424300**	MERCEDES BENZ	C-Klasse (W205) Limousine (14-)	C 160		04.2015		A 000 421 24 12 , 000 421 24 12	
		MERCEDES BENZ	C-Klasse (W205) Limousine (14-)	C 180 BlueTec		05.2014		A 000 421 24 12 , 000 421 24 12	
		MERCEDES BENZ	C-Klasse (W205) Limousine (14-)	C 180		02.2014		A 000 421 24 12 , 000 421 24 12	
24.0126-0188.1	**426188**	OPEL	ASTRA K / Vauxhall Astra Mk VII (15-)	1,0 Turbo		06.2015		13597467	
		OPEL	ASTRA K / Vauxhall Astra Mk VII (15-)	1,4 LPG		11.2015		13597467	
		OPEL	ASTRA K / Vauxhall Astra Mk VII (15-)	1,4 Turbo		06.2015		13597467	
		OPEL	ASTRA K / Vauxhall Astra Mk VII (15-)			11.2015		13597467	
		OPEL	ASTRA K / Vauxhall Astra Mk VII (15-)	1,6		11.2015		13597467	
		OPEL	ASTRA K / Vauxhall Astra Mk VII (15-)	1,6 CDTI		06.2015		13597467	
		OPEL	ASTRA K / Vauxhall Astra Mk VII (15-)			11.2015		13597467	
		OPEL	ASTRA K / Vauxhall Astra Mk VII (15-)	1,6 Turbo		11.2015		13597467	
		OPEL	ASTRA K Sports Tourer/Vau.Astra Mk VII Sp. Toure	1,4		11.2015		13597467	
		OPEL	ASTRA K Sports Tourer/Vau.Astra Mk VII Sp. Toure	1,6 CDTi		11.2015		13597467	
		OPEL	ASTRA K Sports Tourer/Vau.Astra Mk VII Sp. Toure	1,6 Turbo		11.2015		13597467	
		OPEL	ASTRA K Sports Tourer/Vau.Astra Mk VII Sp. Toure	1		11.2015		13597467	
		OPEL	ASTRA K Sports Tourer/Vau.Astra Mk VII Sp. Toure	1,4 Turbo		11.2015		13597467	
24.0130-0242.1	**430242**	VOLVO	XC90 (14-)	D5 AWD		09.2014		31400569	
		VOLVO	XC90 (14-)	2,0 T6 AWD		09.2014		31400569	

								OE numbers per ATE pn.	e.g. replaced pn. / miscellaneous
	SCV - Brake disc front								
24.0130-0242.1	**430242**	VOLVO	XC90 (14-)	D4 AWD		09.2014		31400569	
		VOLVO	XC90 (14-)	2,0 D5 AWD		09.2014		31400569	
		VOLVO	XC90 (14-)	2,0 T5 AWD		06.2015		31400569	
		VOLVO	XC90 (14-)	2,0 T8 Hybrid		09.2014		31400569	
		VOLVO	XC90 (14-)	D4		09.2014		31400569	
24.0132-0187.1	**432187**	TOYOTA	LAND CRUISER 150 (10-)	2,8 D-4D		06.2015		43512-60191	
		TOYOTA	LAND CRUISER 150 (10-)	3,0 D-4D		01.2010		43512-60191	
		TOYOTA	LAND CRUISER 150 (10-)			03.2010		43512-60191	
		TOYOTA	LAND CRUISER 150 (10-)	3,0 TDi		01.2010		43512-60191	
		TOYOTA	LAND CRUISER 150 (10-)	4,0 V6 Dual VVTi		01.2010		43512-60191	
		TOYOTA	LAND CRUISER 150 (10-)	4,0 V6 VVTi		01.2010		43512-60191	
		TOYOTA	LAND CRUISER 150 (10-)	2,7 4WD		01.2010		43512-60191	
	SEH - Wheel sensor rear								
24.0711-6396.3	**360459**	VOLKSWAGEN	CRAFTER (06-16)	2,0 TDI	RL	11.2015		2E0 927 748 AA , 2E0 927 748 P , A 906 905 10 01 , A 906 540 43 17 , 906 905 10 01 , 906 540 43 17	
		VOLKSWAGEN	CRAFTER (06-16)	2,0 TDI BlueMotion	RL	07.2011		2E0 927 748 AA , 2E0 927 748 P , A 906 905 10 01 , A 906 540 43 17 , 906 905 10 01 , 906 540 43 17	

SEH - Wheel sensor rear

24.0711-6396.3	**360459**	VOLKSWAGEN	CRAFTER (06-16)	2,5 TDI	RL	04.2006		2E0 927 748 AA , 2E0 927 748 P , A 906 905 10 01 , A 906 540 43 17 , 906 905 10 01 , 906 540 43 17	
		MERCEDES BENZ	Transporter (BM 906) SPRINTER (06-)	516 CDI	RL	03.2009		2E0 927 748 AA , 2E0 927 748 P , A 906 905 10 01 , A 906 540 43 17 , 906 905 10 01 , 906 540 43 17	
		MERCEDES BENZ	Transporter (BM 906) SPRINTER (06-)	514 CDI	RL	05.2016		2E0 927 748 AA , 2E0 927 748 P , A 906 905 10 01 , A 906 540 43 17 , 906 905 10 01 , 906 540 43 17	
		MERCEDES BENZ	Transporter (BM 906) SPRINTER (06-)	411 CDI	RL	06.2009		2E0 927 748 AA , 2E0 927 748 P , A 906 905 10 01 , A 906 540 43 17 , 906 905 10 01 , 906 540 43 17	
		MERCEDES BENZ	Transporter (BM 906) SPRINTER (06-)	413 CDI	RL	04.2006		2E0 927 748 AA , 2E0 927 748 P , A 906 905 10 01 , A 906 540 43 17 , 906 905 10 01 , 906 540 43 17	
		MERCEDES BENZ	Transporter (BM 906) SPRINTER (06-)	414 CDI	RL	05.2016		2E0 927 748 AA , 2E0 927 748 P , A 906 905 10 01 , A 906 540 43 17 , 906 905 10 01 , 906 540 43 17	
		MERCEDES BENZ	Transporter (BM 906) SPRINTER (06-)	415 CDI	RL	04.2006		2E0 927 748 AA , 2E0 927 748 P , A 906 905 10 01 , A 906 540 43 17 , 906 905 10 01 , 906 540 43 17	
		MERCEDES BENZ	Transporter (BM 906) SPRINTER (06-)	416 CDI	RL	03.2009		2E0 927 748 AA , 2E0 927 748 P , A 906 905 10 01 , A 906 540 43 17 , 906 905 10 01 , 906 540 43 17	

SEH - Wheel sensor rear

24.0711-6396.3	**360459**	MERCEDES BENZ	Transporter (BM 906) SPRINTER (06-)	418 CDI	RL	04.2006		2E0 927 748 AA , 2E0 927 748 P , A 906 905 10 01 , A 906 540 43 17 , 906 905 10 01 , 906 540 43 17	
		MERCEDES BENZ	Transporter (BM 906) SPRINTER (06-)	419 CDI	RL	03.2009		2E0 927 748 AA , 2E0 927 748 P , A 906 905 10 01 , A 906 540 43 17 , 906 905 10 01 , 906 540 43 17	
		MERCEDES BENZ	Transporter (BM 906) SPRINTER (06-)	424	RL	04.2006		2E0 927 748 AA , 2E0 927 748 P , A 906 905 10 01 , A 906 540 43 17 , 906 905 10 01 , 906 540 43 17	
		MERCEDES BENZ	Transporter (BM 906) SPRINTER (06-)	509 CDI	RL	04.2006		2E0 927 748 AA , 2E0 927 748 P , A 906 905 10 01 , A 906 540 43 17 , 906 905 10 01 , 906 540 43 17	
		MERCEDES BENZ	Transporter (BM 906) SPRINTER (06-)	510 CDI	RL	03.2009		2E0 927 748 AA , 2E0 927 748 P , A 906 905 10 01 , A 906 540 43 17 , 906 905 10 01 , 906 540 43 17	
		MERCEDES BENZ	Transporter (BM 906) SPRINTER (06-)	511 CDI	RL	04.2006		2E0 927 748 AA , 2E0 927 748 P , A 906 905 10 01 , A 906 540 43 17 , 906 905 10 01 , 906 540 43 17	
		MERCEDES BENZ	Transporter (BM 906) SPRINTER (06-)	511 CDI 4x4	RL	06.2006		2E0 927 748 AA , 2E0 927 748 P , A 906 905 10 01 , A 906 540 43 17 , 906 905 10 01 , 906 540 43 17	
		MERCEDES BENZ	Transporter (BM 906) SPRINTER (06-)	516 NGT	RL	09.2008		2E0 927 748 AA , 2E0 927 748 P , A 906 905 10 01 , A 906 540 43 17 , 906 905 10 01 , 906 540 43 17	

SEH - Wheel sensor rear

24.0711-6396.3	**360459**	MERCEDES BENZ	Transporter (BM 906) SPRINTER (06-)	513 CDI 4x4	RL	06.2006		2E0 927 748 AA , 2E0 927 748 P , A 906 905 10 01 , A 906 540 43 17 , 906 905 10 01 , 906 540 43 17	
		MERCEDES BENZ	Transporter (BM 906) SPRINTER (06-)	514 CDI 4x4	RL	05.2016		2E0 927 748 AA , 2E0 927 748 P , A 906 905 10 01 , A 906 540 43 17 , 906 905 10 01 , 906 540 43 17	
		MERCEDES BENZ	Transporter (BM 906) SPRINTER (06-)	515 CDI	RL	04.2006		2E0 927 748 AA , 2E0 927 748 P , A 906 905 10 01 , A 906 540 43 17 , 906 905 10 01 , 906 540 43 17	
		MERCEDES BENZ	Transporter (BM 906) SPRINTER (06-)	515 CDI 4x4	RL	06.2006		2E0 927 748 AA , 2E0 927 748 P , A 906 905 10 01 , A 906 540 43 17 , 906 905 10 01 , 906 540 43 17	
		MERCEDES BENZ	Transporter (BM 906) SPRINTER (06-)	516	RL	09.2008		2E0 927 748 AA , 2E0 927 748 P , A 906 905 10 01 , A 906 540 43 17 , 906 905 10 01 , 906 540 43 17	
		MERCEDES BENZ	Transporter (BM 906) SPRINTER (06-)	516 CDI 4x4	RL	06.2006		2E0 927 748 AA , 2E0 927 748 P , A 906 905 10 01 , A 906 540 43 17 , 906 905 10 01 , 906 540 43 17	
		MERCEDES BENZ	Transporter (BM 906) SPRINTER (06-)	518 CDI	RL	04.2006		2E0 927 748 AA , 2E0 927 748 P , A 906 905 10 01 , A 906 540 43 17 , 906 905 10 01 , 906 540 43 17	
		MERCEDES BENZ	Transporter (BM 906) SPRINTER (06-)	518 CDI 4x4	RL	06.2006		2E0 927 748 AA , 2E0 927 748 P , A 906 905 10 01 , A 906 540 43 17 , 906 905 10 01 , 906 540 43 17	

SEH - Wheel sensor rear

24.0711-6396.3	**360459**	MERCEDES BENZ	Transporter (BM 906) SPRINTER (06-)	519 CDI	RL	03.2009		2E0 927 748 AA , 2E0 927 748 P , A 906 905 10 01 , A 906 540 43 17 , 906 905 10 01 , 906 540 43 17	
		MERCEDES BENZ	Transporter (BM 906) SPRINTER (06-)	519 CDI 4x4	RL	03.2009		2E0 927 748 AA , 2E0 927 748 P , A 906 905 10 01 , A 906 540 43 17 , 906 905 10 01 , 906 540 43 17	
		MERCEDES BENZ	Transporter (BM 906) SPRINTER (06-)	524	RL	04.2006		2E0 927 748 AA , 2E0 927 748 P , A 906 905 10 01 , A 906 540 43 17 , 906 905 10 01 , 906 540 43 17	
		MERCEDES BENZ	Transporter (BM 906) SPRINTER (06-)	513 CDI	RL	03.2009		2E0 927 748 AA , 2E0 927 748 P , A 906 905 10 01 , A 906 540 43 17 , 906 905 10 01 , 906 540 43 17	
24.0711-6397.3	**360460**	VOLKSWAGEN	CRAFTER (06-16)	2,0 TDI	RR	11.2015		2E0 927 748 AB , A 906 905 11 01 , A 906 540 44 17 , 906 905 11 01 , 906 540 44 17	
		VOLKSWAGEN	CRAFTER (06-16)	2,5 TDI	RR	04.2006		2E0 927 748 AB , A 906 905 11 01 , A 906 540 44 17 , 906 905 11 01 , 906 540 44 17	
		VOLKSWAGEN	CRAFTER (06-16)	2,0 TDI BlueMotion	RR	07.2011		2E0 927 748 AB , A 906 905 11 01 , A 906 540 44 17 , 906 905 11 01 , 906 540 44 17	
		MERCEDES BENZ	Transporter (BM 906) SPRINTER (06-)	424	RR	04.2006		2E0 927 748 AB , A 906 905 11 01 , A 906 540 44 17 , 906 905 11 01 , 906 540 44 17	

SEH - Wheel sensor rear

24.0711-6397.3	**360460**	MERCEDES BENZ	Transporter (BM 906) SPRINTER (06-)	514 CDI	RR	05.2016		2E0 927 748 AB , A 906 905 11 01 , A 906 540 44 17 , 906 905 11 01 , 906 540 44 17	
		MERCEDES BENZ	Transporter (BM 906) SPRINTER (06-)	416 CDI	RR	03.2009		2E0 927 748 AB , A 906 905 11 01 , A 906 540 44 17 , 906 905 11 01 , 906 540 44 17	
		MERCEDES BENZ	Transporter (BM 906) SPRINTER (06-)	418 CDI	RR	04.2006		2E0 927 748 AB , A 906 905 11 01 , A 906 540 44 17 , 906 905 11 01 , 906 540 44 17	
		MERCEDES BENZ	Transporter (BM 906) SPRINTER (06-)	419 CDI	RR	03.2009		2E0 927 748 AB , A 906 905 11 01 , A 906 540 44 17 , 906 905 11 01 , 906 540 44 17	
		MERCEDES BENZ	Transporter (BM 906) SPRINTER (06-)	509 CDI	RR	04.2006		2E0 927 748 AB , A 906 905 11 01 , A 906 540 44 17 , 906 905 11 01 , 906 540 44 17	
		MERCEDES BENZ	Transporter (BM 906) SPRINTER (06-)	511 CDI	RR	04.2006		2E0 927 748 AB , A 906 905 11 01 , A 906 540 44 17 , 906 905 11 01 , 906 540 44 17	
		MERCEDES BENZ	Transporter (BM 906) SPRINTER (06-)	414 CDI	RR	05.2016		2E0 927 748 AB , A 906 905 11 01 , A 906 540 44 17 , 906 905 11 01 , 906 540 44 17	
		MERCEDES BENZ	Transporter (BM 906) SPRINTER (06-)	511 CDI 4x4	RR	06.2006		2E0 927 748 AB , A 906 905 11 01 , A 906 540 44 17 , 906 905 11 01 , 906 540 44 17	

SEH - Wheel sensor rear

24.0711-6397.3	**360460**	MERCEDES BENZ	Transporter (BM 906) SPRINTER (06-)	413 CDI	RR	04.2006		2E0 927 748 AB , A 906 905 11 01 , A 906 540 44 17 , 906 905 11 01 , 906 540 44 17	
		MERCEDES BENZ	Transporter (BM 906) SPRINTER (06-)	510 CDI	RR	03.2009		2E0 927 748 AB , A 906 905 11 01 , A 906 540 44 17 , 906 905 11 01 , 906 540 44 17	
		MERCEDES BENZ	Transporter (BM 906) SPRINTER (06-)	411 CDI	RR	06.2009		2E0 927 748 AB , A 906 905 11 01 , A 906 540 44 17 , 906 905 11 01 , 906 540 44 17	
		MERCEDES BENZ	Transporter (BM 906) SPRINTER (06-)	415 CDI	RR	04.2006		2E0 927 748 AB , A 906 905 11 01 , A 906 540 44 17 , 906 905 11 01 , 906 540 44 17	
		MERCEDES BENZ	Transporter (BM 906) SPRINTER (06-)	513 CDI 4x4	RR	06.2006		2E0 927 748 AB , A 906 905 11 01 , A 906 540 44 17 , 906 905 11 01 , 906 540 44 17	
		MERCEDES BENZ	Transporter (BM 906) SPRINTER (06-)	513 CDI	RR	03.2009		2E0 927 748 AB , A 906 905 11 01 , A 906 540 44 17 , 906 905 11 01 , 906 540 44 17	
		MERCEDES BENZ	Transporter (BM 906) SPRINTER (06-)	514 CDI 4x4	RR	05.2016		2E0 927 748 AB , A 906 905 11 01 , A 906 540 44 17 , 906 905 11 01 , 906 540 44 17	
		MERCEDES BENZ	Transporter (BM 906) SPRINTER (06-)	515 CDI	RR	04.2006		2E0 927 748 AB , A 906 905 11 01 , A 906 540 44 17 , 906 905 11 01 , 906 540 44 17	

SEH - Wheel sensor rear

24.0711-6397.3	**360460**	MERCEDES BENZ	Transporter (BM 906) SPRINTER (06-)	515 CDI 4x4	RR	06.2006		2E0 927 748 AB , A 906 905 11 01 , A 906 540 44 17 , 906 905 11 01 , 906 540 44 17	
		MERCEDES BENZ	Transporter (BM 906) SPRINTER (06-)	516	RR	09.2008		2E0 927 748 AB , A 906 905 11 01 , A 906 540 44 17 , 906 905 11 01 , 906 540 44 17	
		MERCEDES BENZ	Transporter (BM 906) SPRINTER (06-)	516 CDI	RR	03.2009		2E0 927 748 AB , A 906 905 11 01 , A 906 540 44 17 , 906 905 11 01 , 906 540 44 17	
		MERCEDES BENZ	Transporter (BM 906) SPRINTER (06-)	516 CDI 4x4	RR	06.2006		2E0 927 748 AB , A 906 905 11 01 , A 906 540 44 17 , 906 905 11 01 , 906 540 44 17	
		MERCEDES BENZ	Transporter (BM 906) SPRINTER (06-)	516 NGT	RR	09.2008		2E0 927 748 AB , A 906 905 11 01 , A 906 540 44 17 , 906 905 11 01 , 906 540 44 17	
		MERCEDES BENZ	Transporter (BM 906) SPRINTER (06-)	518 CDI	RR	04.2006		2E0 927 748 AB , A 906 905 11 01 , A 906 540 44 17 , 906 905 11 01 , 906 540 44 17	
		MERCEDES BENZ	Transporter (BM 906) SPRINTER (06-)	518 CDI 4x4	RR	06.2006		2E0 927 748 AB , A 906 905 11 01 , A 906 540 44 17 , 906 905 11 01 , 906 540 44 17	
		MERCEDES BENZ	Transporter (BM 906) SPRINTER (06-)	519 CDI	RR	03.2009		2E0 927 748 AB , A 906 905 11 01 , A 906 540 44 17 , 906 905 11 01 , 906 540 44 17	

SEH - Wheel sensor rear

24.0711-6397.3	**360460**	MERCEDES BENZ	Transporter (BM 906) SPRINTER (06-)	519 CDI 4x4	RR	03.2009		2E0 927 748 AB , A 906 905 11 01 , A 906 540 44 17 , 906 905 11 01 , 906 540 44 17	
		MERCEDES BENZ	Transporter (BM 906) SPRINTER (06-)	524	RR	04.2006		2E0 927 748 AB , A 906 905 11 01 , A 906 540 44 17 , 906 905 11 01 , 906 540 44 17	

SEV - Wheel sensor front

24.0711-6396.3	**360459**	VOLKSWAGEN	CRAFTER (06-16)	2,5 TDI	RL	04.2006		2E0 927 748 AA , 2E0 927 748 P , A 906 905 10 01 , A 906 540 43 17 , 906 905 10 01 , 906 540 43 17	
		VOLKSWAGEN	CRAFTER (06-16)	2,0 TDI BlueMotion	RL	07.2011		2E0 927 748 AA , 2E0 927 748 P , A 906 905 10 01 , A 906 540 43 17 , 906 905 10 01 , 906 540 43 17	
		VOLKSWAGEN	CRAFTER (06-16)	2,0 TDI	RL	11.2015		2E0 927 748 AA , 2E0 927 748 P , A 906 905 10 01 , A 906 540 43 17 , 906 905 10 01 , 906 540 43 17	
		VOLKSWAGEN	CRAFTER (06-16)	2,0 TDI 4motion	RL	11.2011		2E0 927 748 AA , 2E0 927 748 P , A 906 905 10 01 , A 906 540 43 17 , 906 905 10 01 , 906 540 43 17	

13.0460-5650.2 605650

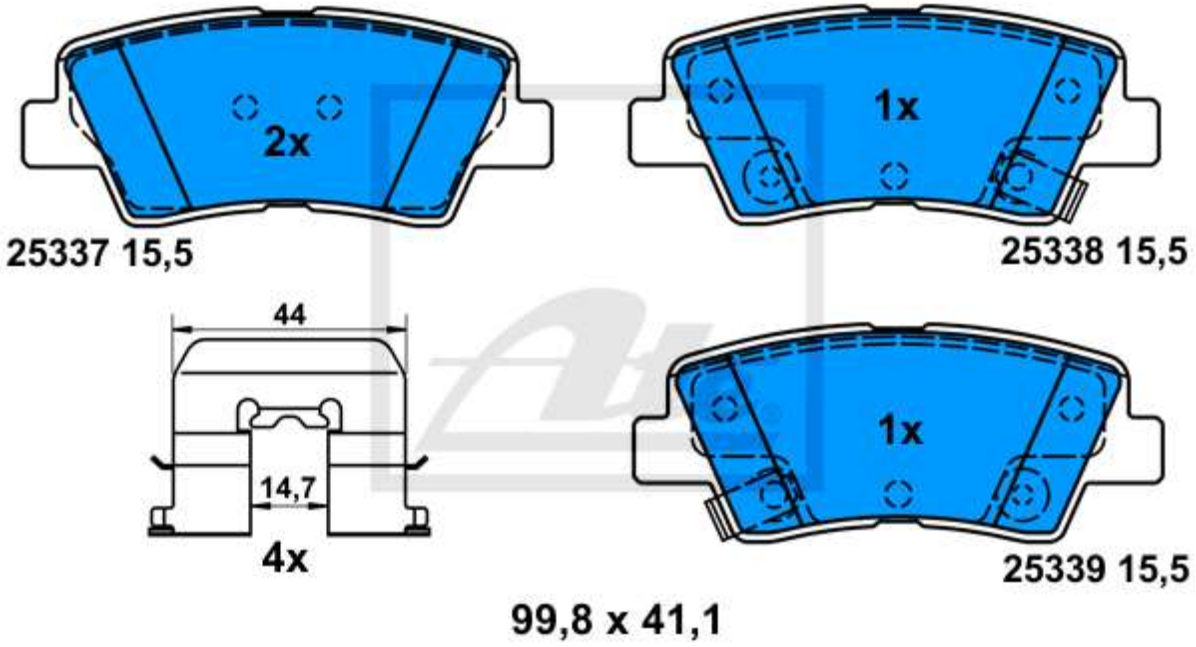

Applications:

HYUNDAI ACCENT IV (10-)
KIA CARENS IV (13-)
KIA CEE'D (12-)
HYUNDAI ELANTRA (MD/UD) (11-15)
HYUNDAI i10 (13-)
HYUNDAI i20 / i20 COUPE (GB) (14-)
HYUNDAI i20 ACTIVE (GB) (15-)
HYUNDAI i30 (GD) (11-17)
HYUNDAI i30 COUPE (13-)
HYUNDAI i30 CW Kombi (12-)
HYUNDAI i40 (12-)
HYUNDAI i40 CW Kombi (11-)
KIA OPTIMA (TF) (10-15)
KIA OPTIMA / OPTIMA SW (JF) (15-)
KIA PRO CEE'D (13-)
KIA RIO III (UB) (11-17)
KIA SOUL (14-)
KIA SPORTAGE (15-)
HYUNDAI TUCSON (15-)
HYUNDAI VELOSTER (11-)

13.0460-5656.2 605656

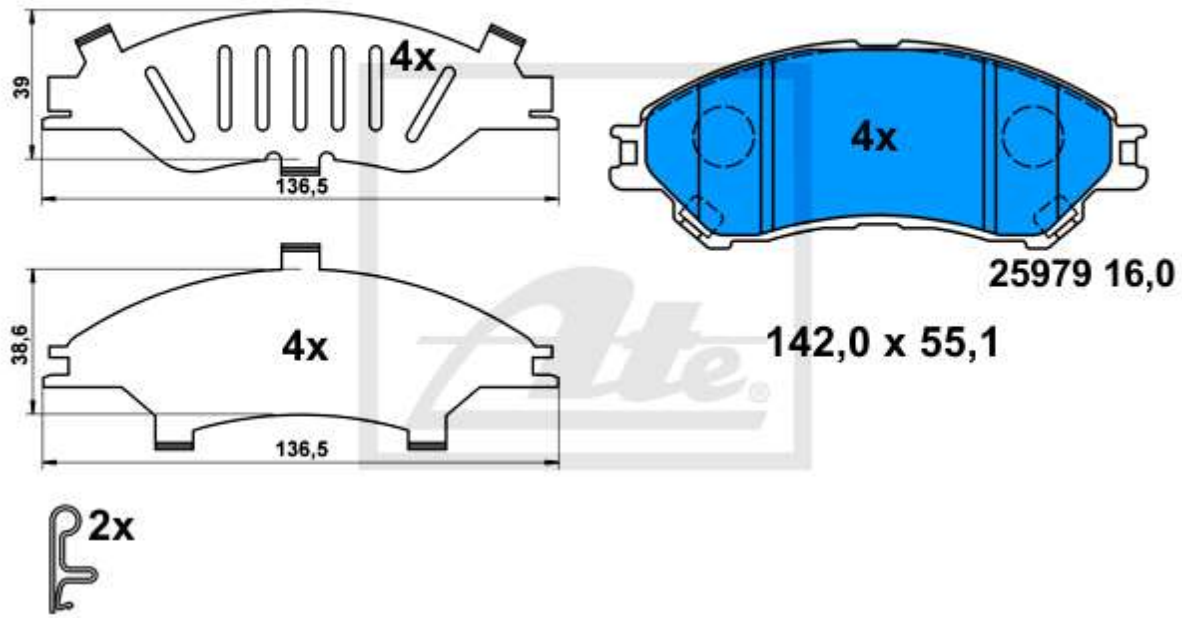

Applications:

SUZUKI SX4 (13-)
SUZUKI VITARA (LY) (15-)

13.0460-5659.2 605659

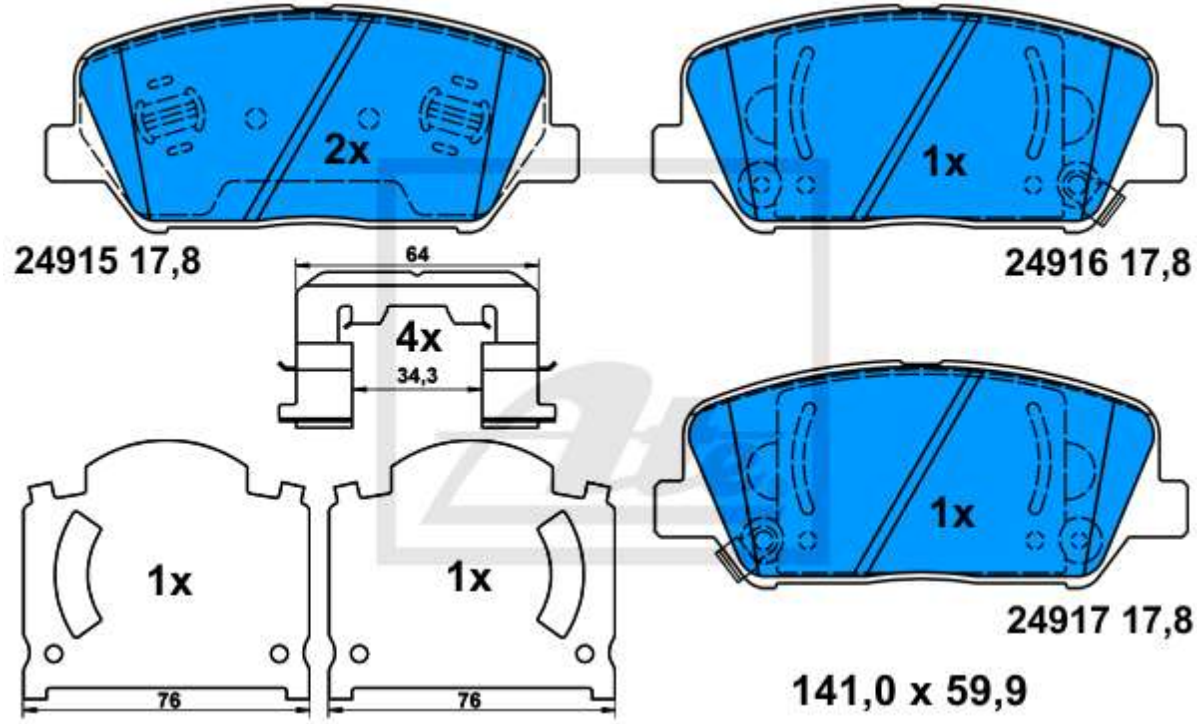

Applications:

KIA CERATO KOUP (09-)
KIA OPTIMA (TF) (10-15)

13.0460-5653.2 605653

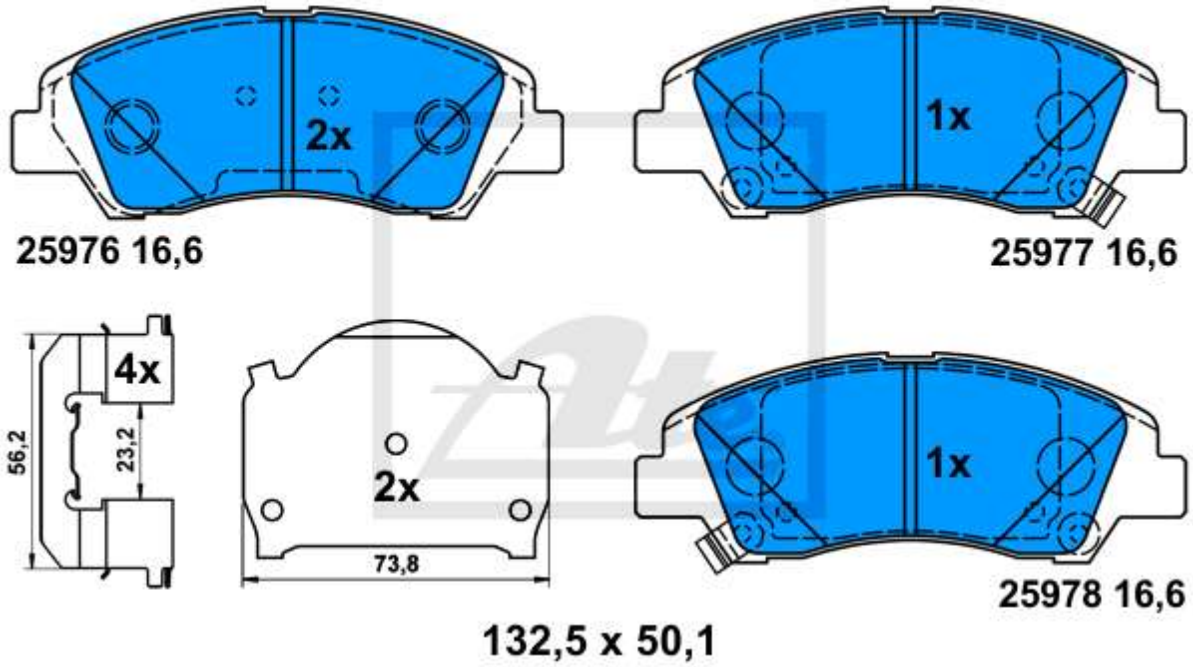

Applications:

HYUNDAI i10 (13-)

13.0460-5674.2 605674

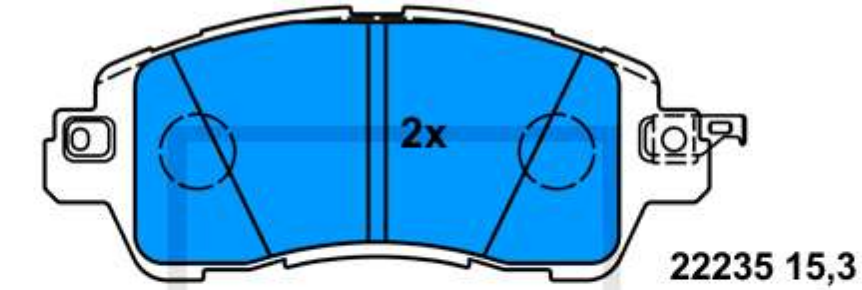

22235 15,3

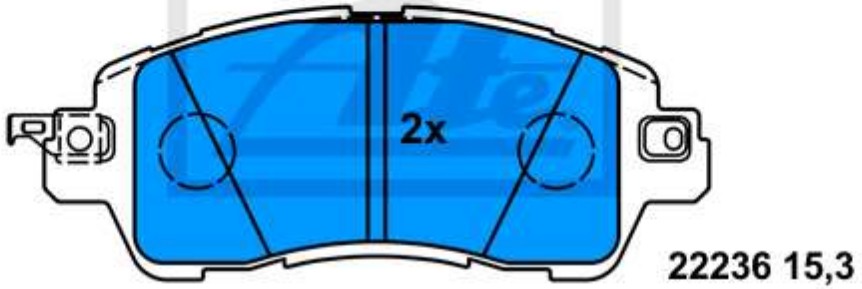

22236 15,3

125,6 x 51,7

Applications:

MAZDA 2 (DJ) (14-)

13.0460-2603.2 602603

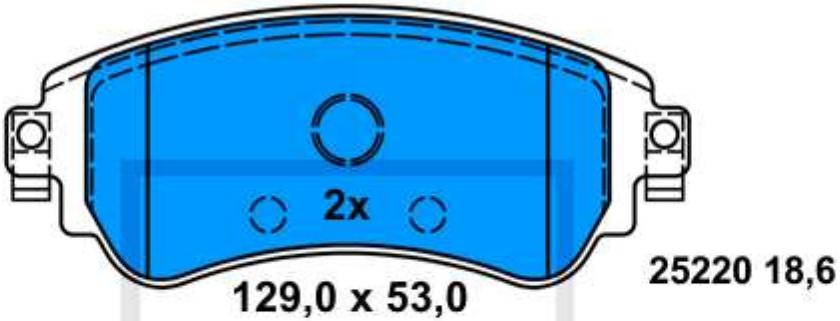

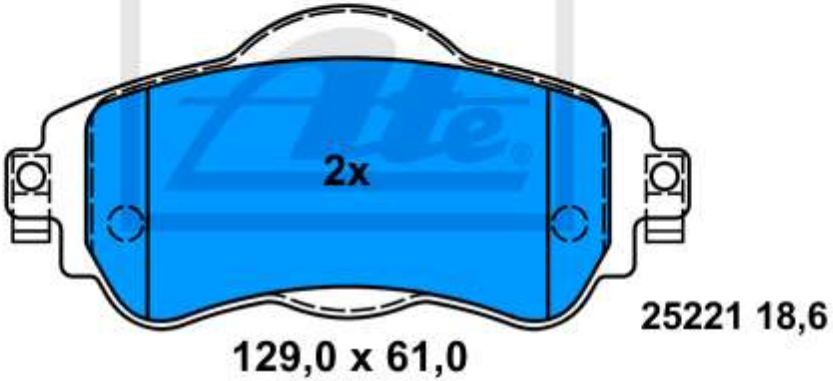

Applications:

CITROEN C4 II Limousine (B7) (10-)